AIR MATTERS

COLLECTION 2020/2021

FABER

AIR MATTERS

LEAVING A **NEW** IMPRESSION **IN THE AIR**

At Faber, we are always looking for innovative technologies and solutions inspired by nature that respect the environment so that you can live in better harmony with the planet at home.

IMPROVING AIR SINCE 1955, TO MAKE THE WORLD A HAPPIER PLACE.

There’s nothing we don’t know about air at FABER.
Our know-how in suction allowed us to invent the kitchen hood. Over the years we’ve moulded air into a thousand forms, just like steel, plexiglass, glass and wood.
As if by magic, we’ve compressed it, made it disappear and reappear from nowhere. We’ve turned the kitchen hood into an object of design and a work of art.
We’ve given it smart functions as a light fitting, air conditioner and filter and even connected it to the future.
Always quick to see how the world is changing, we’re still innovating today, to make tomorrow’s air even purer.

We use air technology in another way too: to improve people’s wellbeing and their quality of life. Living with a FABER hood means feeling protected in your home and natural environment. It means the satisfaction of comfort and versatility, and improving with every day that passes.
FABER works to make your wishes come true, to let you breathe the air of your dreams.
Everybody has a world of their own and we want to make it a happy one.

1955
Nasce Faber Plast.
Faber Plast is founded.

1958
La prima cappa in plexiglass.
The first Plexiglas hood.

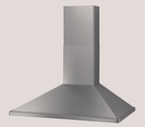

1986
NOVA
La prima cappa a camino.
The first chimney hood.

1995
AXIA
The first T-shape hood.

1999
M@STER
The first smart hood.

2004
MATRIX
The first hood that hangs like a picture.

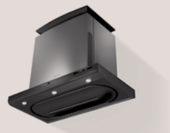

2008
KLIMA
The first air conditioning hood.

2010
F-LIGHT GENERATION
The first chandelier hoods.

2016
TALÌKA
The first totally vertical hood.

reddot award 2017
winner

2018
GLOW
With Airlane Technology

2019
GALILEO
The first hob extractor in A+++

2020
K-AIR
The first touch screen connected hood with air quality sensor.

A **VISION** OF **GLOBAL** REACH

A VISION OF GLOBAL REACH.
FABER has a lot in common with air...
both are present all over the world.
Air has always been our chosen material.
Now the world is our home. So it's only
natural we should want to improve them both.

INVESTING IN THE WORLD
Always growing, to serve more people.
THINKING LONG TERM
All-round competence: automation,
robotics, IT, total quality.
INNOVATING CONTINUOUSLY
Engineering research, advanced solutions,
living benefits.
DESIGNING THE FUTURE
Ergonomics, design, functionality, comfort,
style and wellbeing for the home.

HEADQUARTER
Fabriano - ITALIA

COMMERCIAL OFFICE
Hudson - USA
Chambly - FRANCIA
Istanbul - TURCHIA
Mosca - RUSSIA
Pune - INDIA

PLANT
Sassoferrato - ITALIA
Manisa - TURCHIA
Villedieu-les-Poêles - FRANCIA
Byske - SVEZIA
Kaluga - RUSSIA
Pune – INDIA
San Luis - ARGENTINA
San Luis Potosí - MESSICO

PEOPLE ARE **OUR INSPIRATION**

At Faber, we know how to look far but also very close. **We look at people because they are our inspiration**.

Their needs, desires and dreams are the basic principles for which **we strive to supply better and better answers, time after time**. Everyday actions in a kitchen, even the smallest ones, tell of a daily routine that is a matter of careful study for us so they can be simpler, safer and more spontaneous for you. Everything depends on **wellness** of the people.

SAFETY IS IN **RELIABLE HANDS**

Reliability is a constant characteristic of all FABER products. It becomes easier to appreciate with time, a certainty. When everything is working as it should, home is a more relaxing place. And when the air is pure and clean, home becomes a place of true wellbeing. That's what reliability means to us: making life better for years to come.

RECORDS IN EXCELLENCE

- The first **ISO 9001** Quality Certification in the field of kitchen hoods.
- **SGS Certificate of Excellence n°001**: a worldwide first.
- Integrated Management System for Quality (**ISO 9001:2015**), Occupational Health and Safety (**OHSAS 18001**) and the Environment (**ISO 14001**) certified by SGS.
- Products conforming to the strictest safety requirements and to standards **EN 61591** and **EN 60704-3**, tested in an authorised in-house laboratory, certified and guaranteed by leading international bodies.

IMQ The Italian Quality Mark
CE The EU Safety Mark
SEMKO International Safety Certification by Intertek ETL
UL The Quality Mark for the USA and Canada
CCC The Chinese Quality Mark

DREAM

TRENDY, CONTEMPORARY,
TECHNOLOGICAL.

Il design che esalta un’estetica distintiva, l’attenzione ai dettagli e l’innovazione per far vivere tutto il comfort dell’ambiente cucina come un’esperienza nuova.
Una cappa equipaggiata con le applicazioni più trendy del momento e le funzionalità più intelligenti, come timer, controllo remoto, connessione con i sistemi di automazione domestici.

EMOTION

TIMELESS, COMFORTABLE,
VERSATILE.

The technology that makes the kitchen more welcoming, turning it into the heart of the house.
Quiet, efficient and with a lower impact on the environment.
A hood that knows how to excite with the presence of natural materials, such as wood, and warm colours.
And it can create a laid-back atmosphere, hinting to tradition and packed with style.

SMILE

PRACTICAL, FUNCTIONAL, CURRENT

The simplicity that makes you love it and the ease of use that improves everyday life, with the certainty of constant and enduring reliability.
A hood that is also easy to clean and that satisfies all practical requirements while being remarkably effective in neutralising fumes, vapours and odours in the kitchen, making the environment even more comfortable.

AIR RANGE

Bi-Air 75

C-Air 74

K-Air 62

T-Air 70

V-Air 69

V-Air Flat 66

HOB EXTRACTOR

Galileo NG 78

Galileo 60 88

Galileo Smart 84

HOO-B 92

HOO-B Glass 92

SUSPENDED

Beat 124

Belle / Belle Plus 106

Cèline / Cèline Plus 110

Glow / Glow Plus 102

Lybra Plus 120

Nest Plus 122

Pareo Plus 121

Odette / Odette Plus 114

Soft Cube 118

Skylift 98

Zoom Plus 123

CEILING

Inside Up 130

Heaven 2.0 144

Heaven 2.0 Flat 143

Heaven Air 142

Heaven Glass 2.0 145

Heaven Glass 2.0 Flat 143

High-Light 138

Onyx-C 134

Skypad 2.0 141

DOWNDRAFT

Fabula Plus 60 149

Fabula Plus 90 148

WALL

Bella Comfort 206

Chloè 218

Chloè XL 272

Cocktail 196

Cubia Plus Cubia Gloss Plus 217

Cylindra 214

Cylindra Gloss Plus 215

Daisy Plus 195

Eclipse 216

Grèxia 192

Glam-Fit 184

Glam Fit Zero Drip 166

Glam Fit Zero Drip Plus 156

Glam-Light 188

Glam Light Zero Drip 162

Glam Light Zero Drip Plus 160

Lithos 212

Nice 210

Onyx-T 198

Onyx-V 168

Premio Angolo/ SP 234

Pyana 176

Ray 211

Soft Edge 152

Soft Slim 155

Steelmax 194

Stilo Comfort 207

Stilo Glass Smart 208

Stilo Smart 209

Solaris 235

Synthesis 231

T-Dark 202

T-Light 205

Talika 180

Tender 230

Thea 224

Tweet 197

Twice 172

Value 232

ISLAND

Bella Comfort Isola 243

Chloè XL Isola 256

Corinthia Isola 248

Cubia Isola Plus / Cubia Isola Gloss Plus 253

Cylindra Isola Gloss Plus 251

Cylindra Isola 252

Glassy Isola 246

Stilo Comfort Isola 245

Stilo Glass Smart Isola 244

Thea Isola 258

T-Shelf 238

T-Light Isola 242

Tratto Isola 247

BUILT-IN BUILT UNDER TELESCOPIC

Flexa 293

Flexa Hip 292

Flexa Glass 291

Flexa Glass Lux 290

Hava 267

Ilma 266

Ilma Touch 262

In-Light 276

In-Nova Air 271

In-Nova Comfort 274

In-Nova Premium 273

In-Nova Smart 275

In-Nova Touch 272

In-Nova Zero Drip 268

Inca Lux 2.0 279

Inca Lux Glass 278

Inca Lux Smart 280

Inka Plus HC 283

Inka Plus HCS 282

Inka Smart C 286

Inka Smart HC 285

Inka Smart HCS (ICH) 284

Maxima ECO 289

Maxima EV8 288

Maxima Touch 287

160/45 Plus 298

741 Base 27

741 PB 296

2740 Base 295

2740 PB 294

COUNTRY

Agorà 303

Ranch 304

Ranch Angolo 305

Trendy 301

West 302

HOB

FBH32 315

FBH64 314

FCH64 313

FCH84 312

FCH95 310

FCH SLIM 94 311

ACCESSORIES 316

INSTALLATION 328

Advanced technology for real life benefits.

FABER CLOUD

The exclusive Faber Cloud app can be used to monitor the air quality in your kitchen and adjust the main settings of your hood at any time, even from your mobile phone.

K-LINK

With the radio connection between the hood and Faber induction hob, the suction power is automatically adjusted according to the selected cooking level to optimise performance and avoid unnecessary waste.

AIR QUALITY SENSOR

Keep temperature, humidity percentage and the presence of volatile organic compounds under control in the domestic environment. The sensor automatically adjusts the suction power until perfect air quality is restored.

SIL & STILL

All hoods in the line-up already have a noise level at the maximum power of only 52 dB(A). The Eco Function can be activated by combining the effects of SIL & STILL TECHNOLOGY and the exclusive BRUSHLESS motor, for continuous 24-hour, energy-efficient air exchange in the surrounding environment, silently below 40 dB(A).

STEAM OFF SYSTEM

The dual action of the air entirely eliminates the condensation effect. The hood sucks in and at the same time emits jets of air that create a vortex to accelerate and facilitate conveying and capturing steam.

ZERO DRIP

Stop condensation! Zero Drip collects it in a frame preventing it from dripping onto the hob. Zero Drip Plus makes it evaporate thanks to the specially heated glass of the hood.

AIRLANE

Maximum suction through an invisible passage. A second motor in the ceiling is activated automatically when the hood is switched on.
Fumes and steam are captured by the second motor to purify the air of the entire environment and ensure maximum comfort.

UP & DOWN

The hood descends onto the cooker hob to optimise suction and then rises and disappears completely into the ceiling when it has finished, clearing the space altogether.

NAUTILUS

More power, less noise, superior comfort!
Faber technology increases suction capacity by 30 m3/h, reduces noise and improves efficiency, always with minimal consumption.

ARIES

With the power of two brushless motors, Aries achieves a suction capacity of over 700 m3 abating noise by 9 dB(A). The superior, energy-saving and quiet performance of Aries puts vertical hoods in Class A.

BRUSHLESS

The brushless motor guarantees considerable energy saving coupled with high extraction efficacy. It is the most silent motor on the market and its performance remains stable in any usage condition.

REMOTE BLOWER

Available on many products, it allows you to install the motor away from the hood to reduce the noise in the kitchen. For acoustic comfort at the highest level.

PERIMETER ASPIRATION

25% less* perceived noise. Perimeter suction exploits the Venturi effect to accelerate the air flow through a narrow gap. The air slows down again once inside the hood for more efficient extraction.

*Equivalent to a reduction of 3 dB(A) according to EN 60704-3.

WATERPROOF

Any liquid spilled during cooking flows directly into a suction grille and is collected in an automatically drained tray under the hood, small enough to leave space for a utensil drawer.

POWER MANAGEMENT

Adjustable absorption setting on 4 power levels (KW). No more blackouts at home!

HFH FILTERING

Capable of eliminating 95% of bad smells, the technology guarantees maximum effectiveness in activated carbon filtering. HFH technology makes the hood more efficient for air purification from all odours..

FILTER ALARM

Filter saturation alarm: warns you when it is time to clean the anti-grease filter or substitute the anti-odour filter.

REAR OUTLET

The rear air outlet available with many FABER hoods allows fumes to be channelled to the rear instead of upwards. This eliminates the need for an upper duct, freeing up useful space above the hood.

SELF START

A special sensor switches the hood on as soon as air temperature reaches 35°C. A smart sensor activates your hood automatically whenever needed. Faber loves to make cooking easier and more enjoyable!

AUTOMATIC FUNCTION

The hood will turn on at the most suitable speed automatically, adapting the extraction capacity to the maximum cooking level.

HOUR 24

Key 24: function which allows the hood to be switched on for 24 hours a day for air renewal with a level of noise that is imperceptible.

LED LIGHT DIMMER

Dimmable light: at the touch of a button the light is dimmed down and can be left on for a long time with minimal energy consumption.

TUNABLE WHITE

On some models, you can choose and vary the colour temperature of the light, from warmer (tending to yellow) to colder (tending to white).

DELAY 30

Automatic shutdown delay: you can postpone the motor shutdown to eliminate residual odours completely.

SPEED I

Intensive speed: function which activates maximum aspiration for 6 minutes to meet special cooking needs.

SOFT TOUCH

FENIX®, a high-tech material with unique characteristics. Soft and smooth to the touch, matte and smudge-proof surface.

ANTI TOUCH

Special smudge-proof materials for a perfectly clean hood and a surface without annoying stains.

BOOST

Thanks to the Double Intensive Function. Even the most persistent cooking steam and smells are eliminated in just a few minutes.

LED LIGHT

Thanks to the LED lighting you will have a brilliant light and excellent visibility over the entire cooking area, with a considerable energy saving.

TOUCH CONTROL

Extremely comfortable, user-friendly Touch Slider controls.

REMOTE CONTROL

The new remote control is compatible with many Faber hoods. To adjust suction and special functions, such as the courtesy light, 24H, Up&Down and Steam Off features.
Controlling your hood is easier than ever.

K-LINK TECHNOLOGY
AND THE HOOD ADJUSTS ITSELF AUTOMATICALLY

FREE HANDS IN THE KITCHEN. THANK YOU, FABER
The beauty of cooking is also that you can express yourself freely, without distractions. If you have an induction hob and a Faber cooker hood with K-LINK connection, just start cooking and the suction power of the hood automatically adjusts to the selected cooking level.

HOB AND HOOD DIALOGUE WITH EACH OTHER
Faber has created an intelligent connection between hob and hood, through an integrated system that works with radio waves.
A simple gesture is all it takes to set the hood to automatic operation. The system is always active because the radio signal is never interrupted.
At the same time, the perfect operation of the hood is guaranteed avoiding the waste of energy and excessive noise that you could have set the suction at a level too high compared to the produced fumes.

The connection is always active even in the presence of dirt residues on the hob.

It can be controlled manually whenever you want.

Models of hoods prepared for connection with Faber induction hobs.

Belle / Belle Plus

Bi-Air

C-Air

Cèline / Cèline Plus

Glow / Glow Plus

Heaven 2.0

Heaven Air

Heaven Glass 2.0 Flat

High-Light

K-Air

In-Nova Air

In-Nova Premium

Inca Lux 2.0

Inca Lux Glass

Inside Up

Lybra Plus

Pareo Plus

Nest Plus

Odette / Odette Plus

T-Air

V-Air

V-Air Flat

CONDENSATION IS NO LONGER A PROBLEM

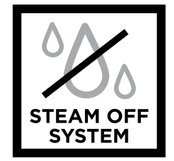

FABER ELIMINATES THE PROBLEM OF CONDENSATION

Eliminating condensation is essential to protect the wall unit where the hood is installed and to prevent drops of moisture from falling onto the hob. Faber has succeeded by creating special anti-condensation systems of total effectiveness.

STEAM OFF SYSTEM

The Steam Off System implementing Faber exclusive technology eliminates the problem from the beginning, avoiding the formation of condensation.
While sucking in, the hood emits controlled jets of air that by whirling and accelerating, promoting the upward movement and convey the vapours to capture them all.

ZERO DRIP

The Faber Zero Drip and Zero Drip Plus systems stop condensation after it has formed. The first one collects it in a groove preventing it from dripping onto the hob. The second makes it evaporate through contact with specially heated surfaces.

ZERO DRIP

ZERO DRIP PLUS

Pressing a button on the glass part of the hood activates a heating resistor that makes the condensation evaporate completely.

Models with technology STEAM OFF SYSTEM

Luft

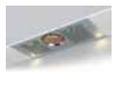

Hava

Ilma

Ilma Touch

Models with technology ZERO DRIP PLUS

Glam Fit Zero Drip

Glam Fit Zero Drip Plus

Glam Light Zero Drip

Glam Light Zero Drip Plus

In-Nova Zero Drip

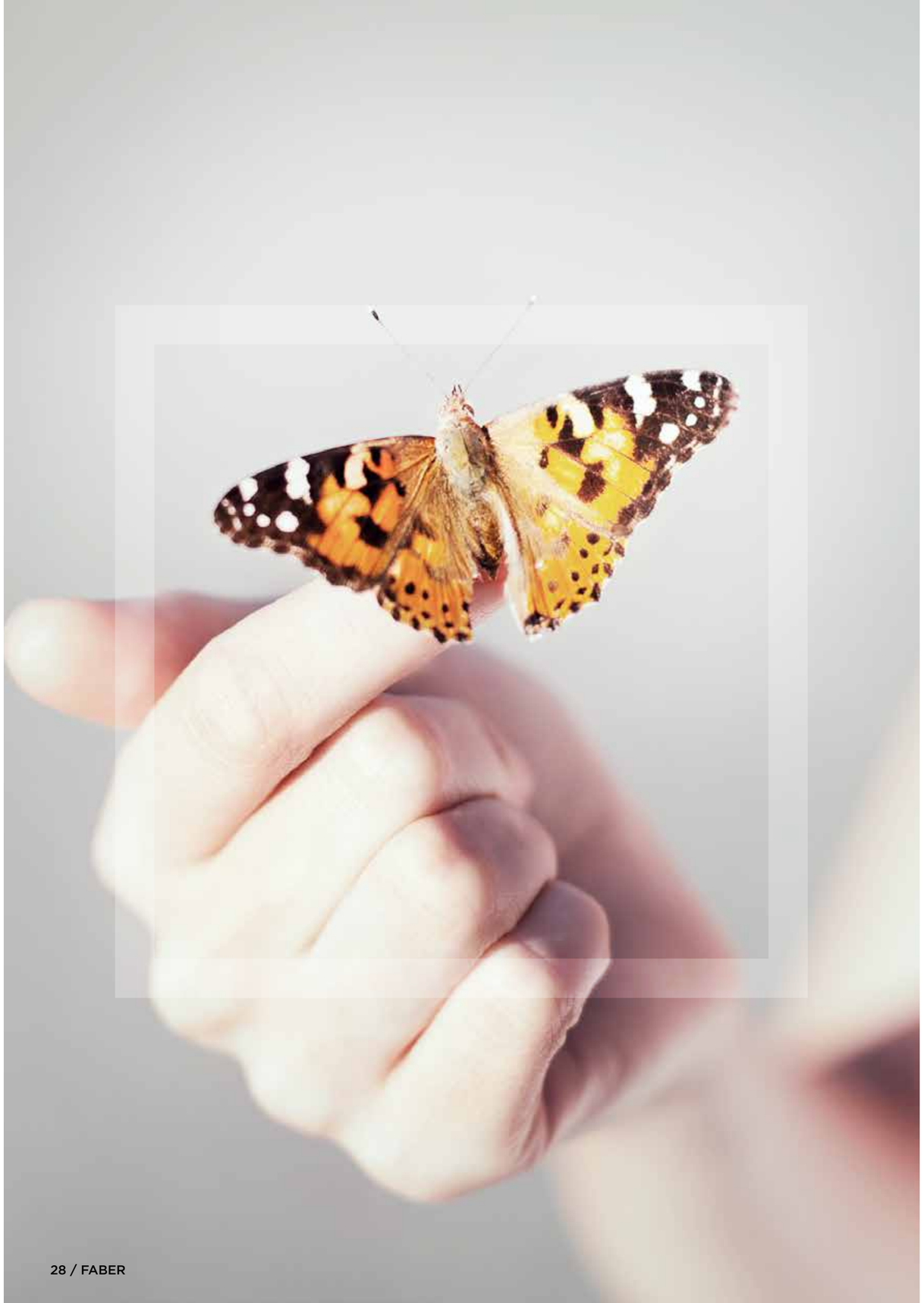

SILENCE THAT RESPECTS NATURE

THE FIRST COMFORT IS SILENCE
To make the kitchen a comfortable environment to live in, it is essential to have a hood that works making as little noise as possible, even at top power.

SIL & STILL TECHNOLOGY
Based on the study of aerodynamic flows inside the hood and targeted sound insulation, this Faber technology reduces noise at top power to just 52 dB(A). By activating the Eco Function, it ensures continuous air exchange in the surrounding environment for 24 hours, silently and with minimum consumption below 40 dB(A) comparable to the quietness of a library.

BRUSHLESS MOTOR
Faber is constantly looking for technologically advanced solutions and with this motor, it guarantees the best energy efficiency on the market.

REMOTE BLOWER
The noise of the hood can be minimised by moving the motor away.

Models with technology SIL & STILL

ONYX-C ONYX-V ONYX-T

THE SILENT PLEASURE OF A REMOTE MOTOR

REMOTE BLOWER

REMOTE SUCTION KIT
The remote suction kit, with the utmost simplicity, makes it possible to move the hood motor away from the cooking area.

THE SILENCE INCREASES SIX METRES AWAY
With the Remote Suction Kit, the motor can be moved to another location of the house up to six metres away from the hood. Minimal noise and maximum comfort are ensured not only in the kitchen but also in the living area.

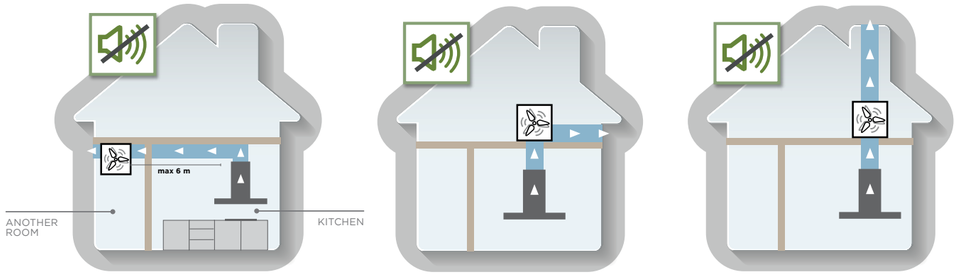

The model with the dedicated range of hoods is shown in the Accessories section on page 316

REMOTE EXTERNAL MOTOR
The remote external motor makes it possible to install the motor entirely outside the house and eliminate noise altogether.

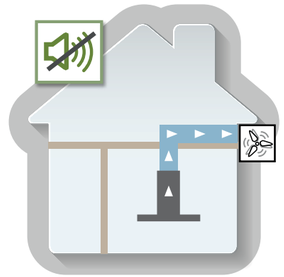

The model with the dedicated range of hoods is shown in the Accessories section on page 316

SOFT LINE
REVOLUTIONISES DESIGN

Soft Line is the Faber range of hoods made with FENIX®, a high-tech material with unique characteristics.
The matte, smudge-proof surface is soft to the touch and reflects very little light. It is non-porous to facilitate daily maintenance and cleaning.

FENIX® is a material with high resistance to scratches, abrasions, dry heat and acids. Its properties make it perfect for kitchens.
Another characteristic is that it can self-heal surface micro-scratches.

FENIX®

USED AS A KITCHEN TOP IT IS A PERFECT MATCH FOR THE HOOD.

The Faber Soft Line consists of a suspended hood F-light (Soft Cube) and two vertical wall-mounted hoods (Soft Edge e Soft Slim).
They are all available with three FENIX® finishes: Grigio Londra, Bianco Kos or Nero Ingo.

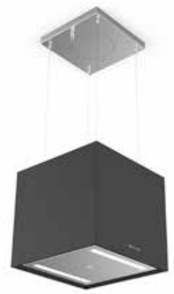

SOFT CUBE

SOFT EDGE

SOFT SLIM

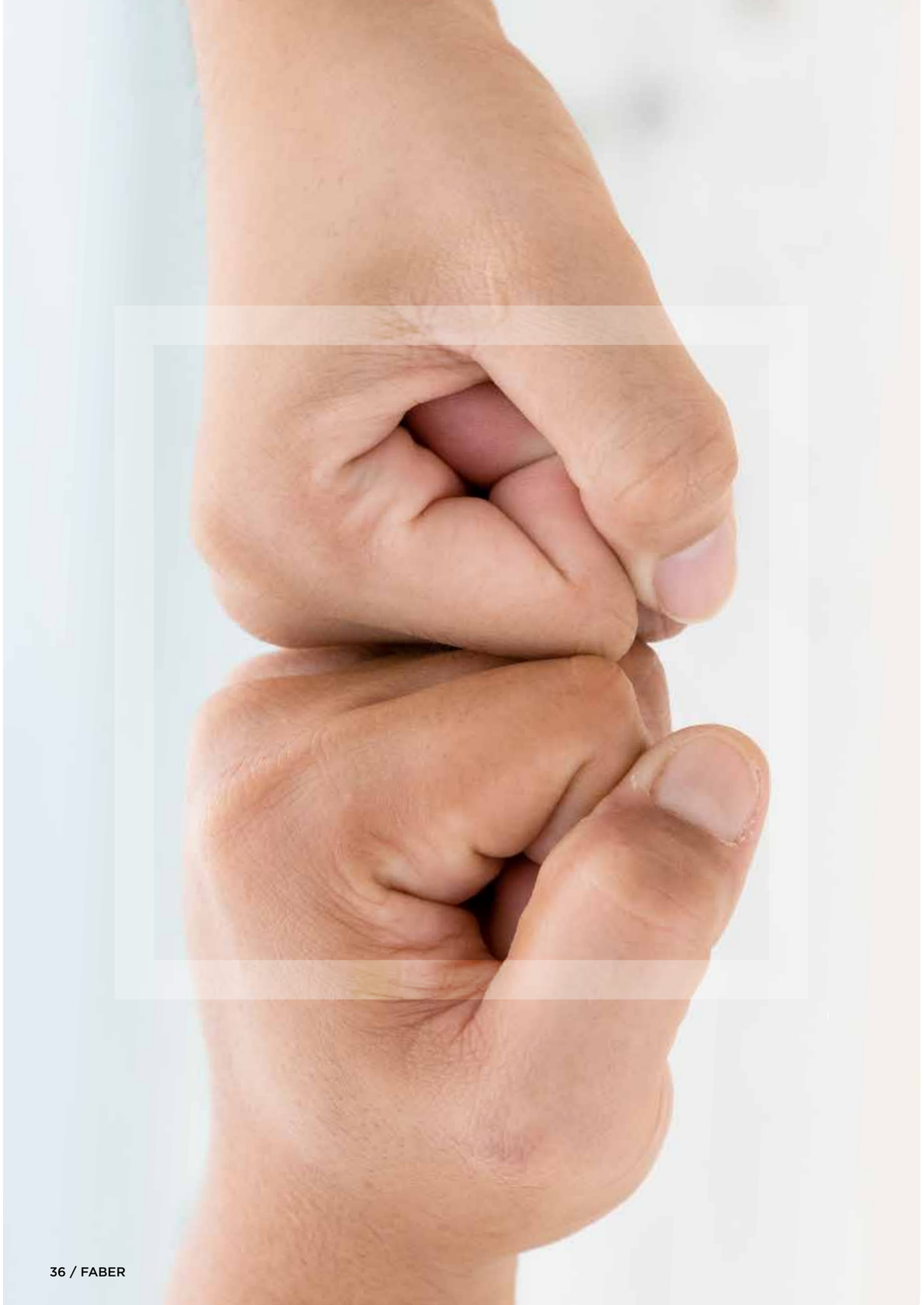

AIRLANE TECHNOLOGY
SUPERB EXTRACTION THROUGH AN INVISIBLE DUCT

REAL POWER MAKES NO NOISE.
IT KEEPS THE SECRET.
AIRLANE TECHNOLOGY can be used to install more than one Faber suspended hood in suction mode without the presence of unsightly connection pipes. In this way, you can have a hood and light cluster that integrates perfectly into the décor of your kitchen.

THE POWER OF A DOUBLE SUCTION.
With AIRLANE TECHNOLOGY a second motor in the false ceiling conveys fumes and cooking vapours sucked from the hood without piping.

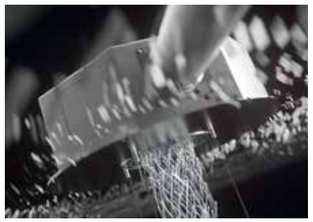

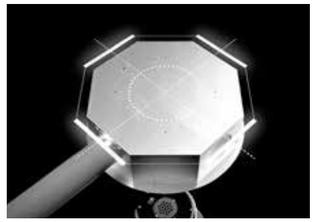

Discover the technology video on our YouTube channel [faberairmatters]

Airlane conceals a second motor in only 30 cm of false ceiling allowing you to choose between four air outlet positions during installation.

KIT AIRLANE TECHNOLOGY

KIT AIRLANE ASPIRANTE cod. 1120542.875

FEATURES

Finish
- Stainless steel

Ø of air outlet
150 mm

Width
840 mm

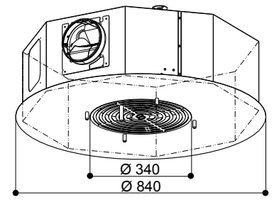

THE AIRLANE KIT REPLACES THE CHIMNEY/DUCT NEEDED FOR SUSPENDED INSTALLATION AS AN EXTRACTION HOOD.

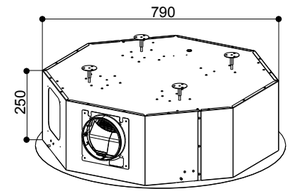

A NEW PLUS FOR F-LIGHT HOODS.
With the following F-Light hoods, both fixed and with Up & Down movement from the ceiling, you can get rid of suction piping at last. It disappears completely thanks to AIRLANE technology, which also guarantees better air purification and Energy Class A performance.

GLOW
GLOW PLUS

BELLE
BELLE PLUS

ODETTE
ODETTE PLUS

CÈLINE
CÈLINE PLUS

Optional on all F-LIGHT models

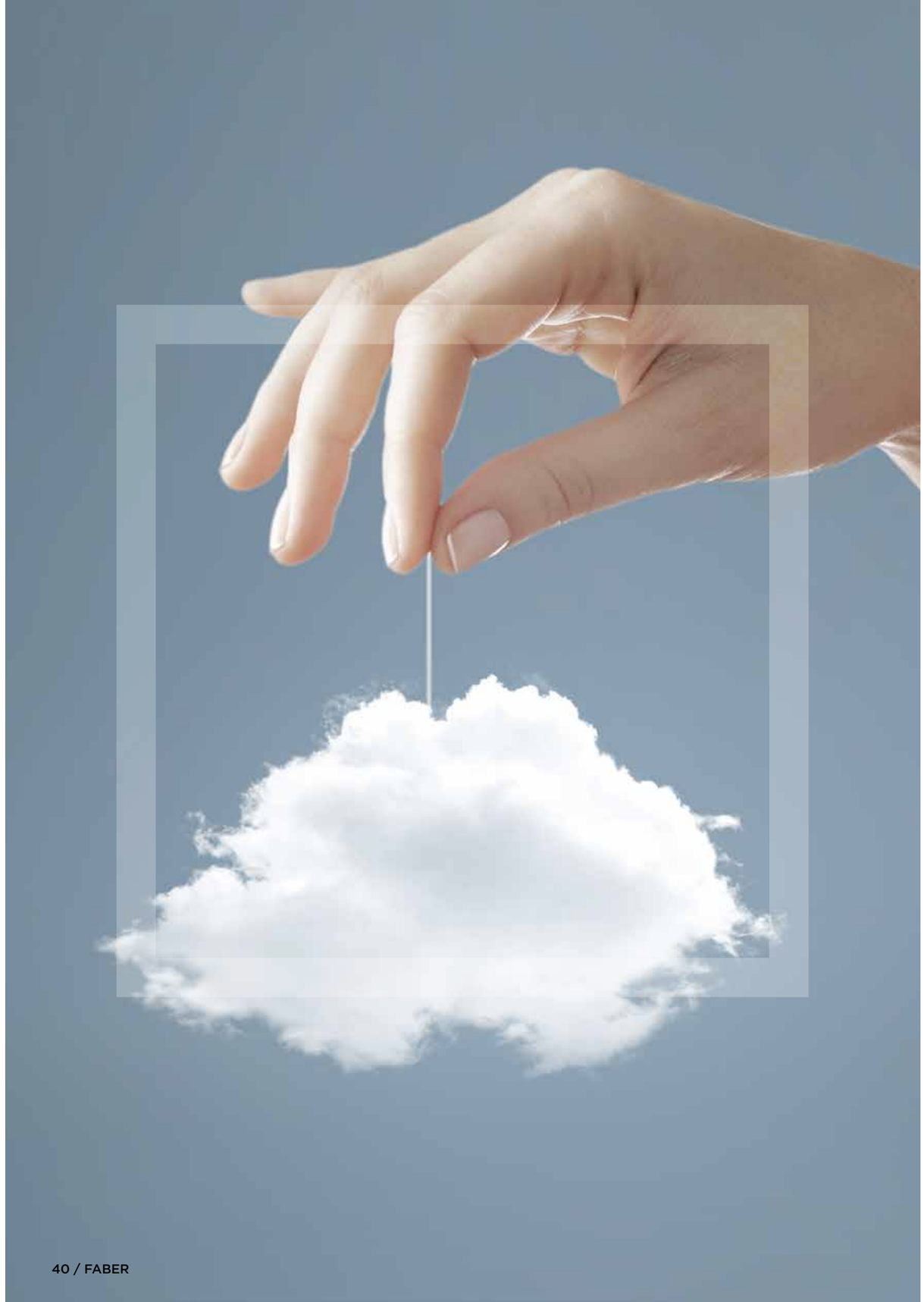

UP&DOWN TECNOLOGY
FREEDOM OF MOVEMENT IS IN THE AIR

In open-concept kitchen and living room combos and in those where space is restricted, there is often the need to choose a suspended hood with a design matching the interior décor.
Faber solves these needs by combining the function of a hood with that of a light fitting.

THERE'S A HOOD: IT'S IN THE LIGHT FITTING.
With the Up & Down technology, Faber perfectly integrates hood and light fitting, combining the needs of aspiration with those of design and lighting.

AN AMAZING SPACE-SAVING SOLUTION.
These hoods are excellent space-saving solutions capable of illuminating and enhancing any type of environment, from the most linear to the most sophisticated.

UP & DOWN: NICE MOVE IN THE KITCHEN.
DOWN: The hood moves down to illuminate the hob and optimise suction while cooking.
UP: The hood returns to the ceiling to form an elegant light fitting. And FABER's brand-new remote control makes movement easy.

F-LIGHT: MOVE IN CLASS A.
All F-Light models with their energy efficiency go far while bringing comfort closer.

Models with technology UP & DOWN

Belle Plus

Cèline Plus

Glow Plus

Lybra Plus

Nest Plus

Pareo Plus

Odette Plus

Skylift

Zoom Plus

LESS CONSUMPTION, MORE EFFICIENCY

NAUTILUS

ARIES

FLAT DESIGN AND MAXIMUM COMFORT
Completely flat vertical hoods, for an even more trendy ultra-slim design. This is achieved with the Faber diffusers that concentrate the maximum suction power and the best energy efficiency in just 15 cm.

NAUTILUS
The exclusive diffuser design naturally inspired by the golden ratio for superlative comfort and outstanding performance.

ARIES
With the power of two brushless motors, Aries achieves performance with a suction capacity of over 700 m3 abating noise to 9 dB(A).
The hoods with Aries technology are in Class A+.

Models with technology NAUTILUS and ARIES

Glam-Fit

Glam Fit Zero Drip

Glam Fit Zero Drip Plus

Soft Slim

Talika

NAUTILUS
▶ ULTRA-THIN
▶ LOW ENERGY CONSUMPTION
▶ HIGH EFFICIENCY
15 CM

ARIES
▶ MAXIMUM POWER WITH TWO BRUSHLESS MOTORS
▶ ULTRA-THIN
▶ LOW ENERGY CONSUMPTION
▶ QUIETER OPERATION

HFH TECHNOLOGY
NO BAD SMELLS

HIGH FILTERING

ONLY FABER HOODS ELIMINATE 95% OF ODOURS.
What's the most effective activated carbon filtration technology? It's called HFH, which stands for "HIGH FILTERING HOOD". And it's a FABER exclusive, of course. HFH improves hood performance by removing odours from the air almost totally.

A LARGER SURFACE AREA AND TWO LAYERS OF ULTRA-EFFICIENT FILTER MATERIAL.
Faber's potent HFH technology is based on a cylindrical filter design with a far larger surface area. It's twice as effective too, because it uses two high-effciency filtration layers with different porosities and activated carbon concentrations. That's how the filter captures both large and small particles.

FABER MAKES THINGS EASIER...QUIETLY.
Unlike other activated carbon filter systems, HFH also reduces noise by around 3 dB(A). And the smart, cylindrical shape of the filter makes easy work of removing the dishwashercompatible filter material.

The **easy-to-install** cylindrical filter has a larger area compared to conventional ones guaranteeing more effectiveness.

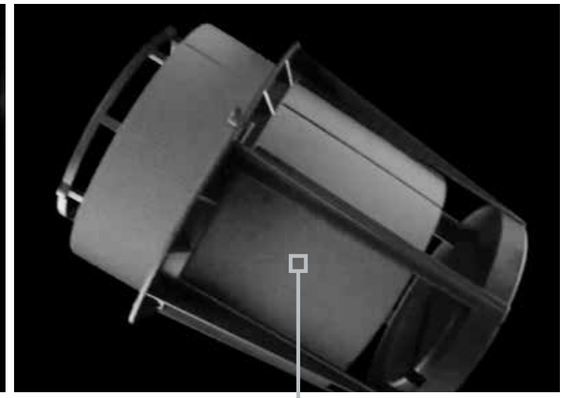

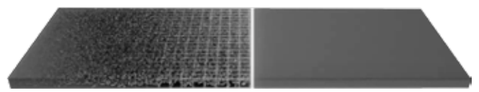

Ultra-filtering material consisting of two panels with different porosity and concentration of active carbon.
The first layer captures the coarsest particles and the second smaller ones, increasing effectiveness even more.

Dishwasher safe.

Models with technology HFH

Stilo Comfort

Stilo Glass Smart

Stilo Smart

Nice

Ray

GREEN INNOVATION
THE FUTURE IS IN OUR HANDS

WE ALSO THINK ABOUT THE PLANET
Making sustainable choices is essential to respect the world we live in. Therefore, it is important to choose a hood that is energy-efficient. By developing solutions aimed at lower environmental impact and greater energy savings, Faber also takes care of the planet

LED LIGHT
All FABER hoods incorporate LED lighting technology.
The LED units consume next to nothing and produce a pleasantly natural light that ensures perfect visibility without altering colours

HIGHER CLASS ENERGY
Today, Faber hoods are confirmed in the highest energy classes. They ensure superlative performance and minimum consumption of the suction motor, filtering system and lighting. The top-of-the-range Galileo hob extractor achieves excellence in Class A+++.

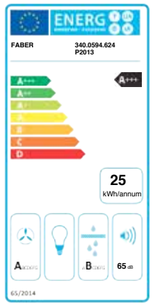

Energy Efficiency Class: hoods with the highest ratings (A++, A+, A) consume less and are more respectful of the environment (green colour).
Annual Electricity Consumption: calculated for standard hood functioning times (60 minutes of suction and 120 minutes of lighting a day).
Fluid-dynamic efficiency: reveals the quality and power of the hood: efficiency rises as suction power increases or energy consumption decreases.
Lighting efficiency: this indicates how much light the hood produces for the energy it consumes; for the same lighting power, more light-efficient hoods consume less.
Filter efficiency: indicates the filter's capacity to capture grease.
Noise level: measured in dB at the hood's maximum fan speed (not boost).

AIR TREATMENT

AIR TREATMENT
AIR QUALITY IS ALWAYS UNDER CONTROL

FABER CLOUD

AIR QUALITY SENSOR

HOODS CONNECTED TO YOUR WORLD
All hoods in the AIR TREATMENT by Faber range fit an Air Quality Sensor. This innovative device monitors the air and activates suction if it detects the presence of allergens, pollutants or odours.
By storing data on the Faber cloud, via an app that can be downloaded to smartphones, you can monitor the air quality at home at any time, even remotely.

K-AIR WITH INTEGRATED MONITOR
K-Air is an intelligent vertical hood with a built-in 21" monitor that can be controlled directly via the touchscreen or app.
The exclusive Sensor Air Quality keeps the temperature, the percentage of humidity and the presence of volatile organic compounds (VOC and VOC), Carbon Monoxide and Nitrogen dioxide and methane under control in the domestic environment.
The sensor activates the hood as soon as pollution thresholds are exceeded, primarily in the space where you cook.

THE IDEAL SOLUTION FOR YOUR **SMART HOME**

MONITORS INDOOR AIR QUALITY AND RESTORES FRESH AIR IN YOUR KITCHEN

YOUR FAVOURITE WEB PAGES ACCESSIBLE ANYTIME, CONNECTION TO YOUR INTERNET BROWSER
(AVAILABLE ON K-AIR MODEL)

THANKS TO THE FABER CLOUD, YOU CAN ACCESS IT FROM ANYWHERE AND CHECK YOUR HOME ENVIRONMENT

ALL FUNCTIONS CAN ALSO BE MANAGED VIA THE FABER APP

REMOTE **MANAGEMENT** TOO

THE IDEAL SOLUTION FOR YOUR SMART HOME.
The exclusive App is designed to monitor air quality in your kitchen and manage the hood remotely too, with simple and intuitive functions.

A RANGE THAT IS **ALWAYS CONNECTED**

AIR TREATMENT by Faber is a complete range comprised of vertical, ceiling, T-shape and built-in hood models. All the hoods are equipped with an Air Quality Sensor, connection to the Faber Cloud and can be controlled remotely via the App. In addition, the K-air model comes equipped with the exclusive 21.5 inch integrated monitor.

BI-AIR

C-AIR

IN-NOVA AIR

HEAVEN AIR

K-AIR

T-AIR

V-AIR

V-AIR FLAT

AIR RANGE

AIR RANGE

BI-AIR	75
C-AIR	74
K-AIR	62
T-AIR	70
V-AIR	69
V-AIR FLAT	66

K-AIR

AIR RANGE

K-AIR
TECHNOLOGICAL PLUS

MOBILE APP VIA FABER CLOUD
Mobile APP via Faber Cloud keeps you informed through the dedicated app when it reaches unsafe conditions, allowing remote control too.

AIR QUALITY INDICATOR
constantly monitors Indoor Air Quality in your kitchen.

AUTO FUNCTION
it automatically sets and controls the aspiration phase to remove pollution and restore fresh air in your kitchen.

RECIPIES PLAY VIDEO
Full web browser and audio diffusers. Listen your favourite music or cooking assistant through video recipes.

FULLY INTEGRATED WITH AMAZON ALEXA
Use voice control to switch on/off the hood, set aspiration level and control the lights.

CONNECTED TO YOUR HOME ADDITIONAL DEVICE
Connect your wi-fi / IP remote cameras. Always visible directly into your hood monitor

MULTIPLE TIMER
Multiple Timer management.

SHOW YOUR FAVORITE
Your favourite picture slideshow in the Kitchen.

TOUCH MONITOR 21.5
21.5 inches touch display.

TUNABLE WHITE
Set dimmerable white LED intensity.

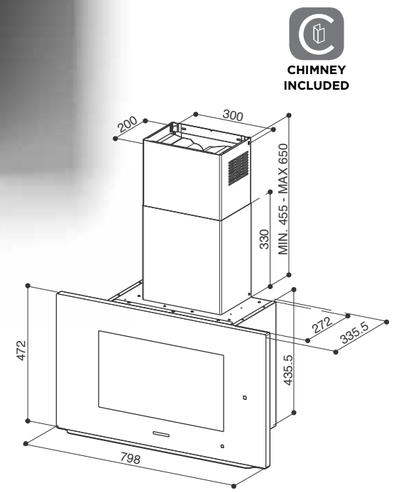

K-AIR

K-AIR TOUCH KL A80 cod. 330.0615.671

FABER CLOUD · AIR QUALITY SENSOR · K-LINK · INTENSIVE SPEED · DELAY 30 · HOUR 24 · TUNABLE WHITE · REMOTE CONTROL (optional) · LED LIGHT DIMMER · LED LIGHT · A ENERGY

FEATURES	
Finish	• Black and light brown glass
Controls	Touch control
Lighting	LED lights
Grease filter	Cassettes dishwasher safe
Ø of air outlet	150 / 120 mm
Width	800 mm
Energy class	A

PERFORMANCE				
Speed	1	2	3	INT
Air capacity IEC point	280	430	580	700
Pressure	420	480	520	530
Input	190	230	255	270
Noise level	52	59	66	70

ACCESSORIES

Cod. 112.0157.240
F8 Charcoal filter

Cod. 112.0158.127
FHP8 Charcoal filter High Performance

Cod. 112.0185.278
FLL8 Charcoal filter Long Lasting

Cod. 112.0252.439
Recycling version kit WH

Cod. 112.0252.442
Recycling version kit BK

V-AIR FLAT

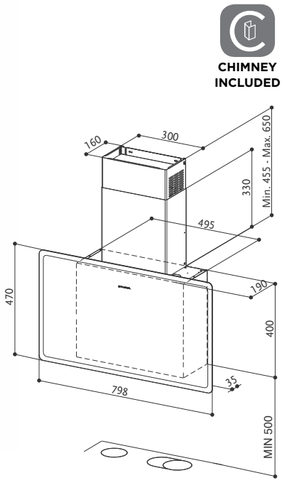

CHIMNEY INCLUDED

V-AIR FLAT

V-AIR FLAT KL A80 cod. 330.0615.684

FABER CLOUD · AIR QUALITY SENSOR · K-LINK · NAUTILUS · INTENSIVE SPEED · NEW CONTROL REMOTE CONTROL · LED LIGHT (optional) · A ENERGY

FEATURES	PERFORMANCE				ACCESSORIES
Finish	**Speed**	1	2	3	INT	**Cod. 112.0540.783**
• Black and light brown glass	**Air capacity IEC point**	190	250	400	570	F22 Charcoal filter
Controls	**Pressure**	300	450	540	650	**Cod. 112.0615.733**
Touch control	**Input**	100	115	120	125	Remote control
Lighting	**Noise level**	52	58	67	73	
2 LED lights						
Grease filter						
Cassettes dishwasher safe						
Ø of air outlet						
150 / 120 mm						
Width						
800 mm						
Energy class						
A						

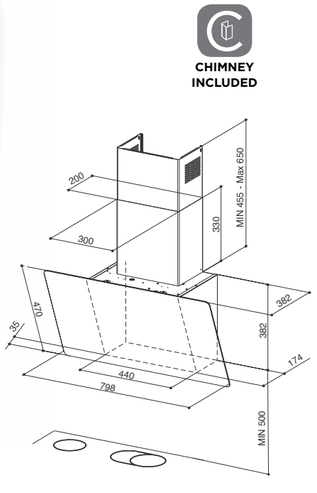

CHIMNEY INCLUDED

V-AIR

V-AIR KL A80 cod. 330.0615.685

FABER CLOUD · AIR QUALITY SENSOR · K-LINK · INTENSIVE SPEED · NEW CONTROL REMOTE CONTROL · LED LIGHT (optional) · A+ ENERGY

FEATURES	PERFORMANCE					ACCESSORIES
Finish	**Speed**	1	2	3	INT	**Cod. 112.0157.240**
• Black and light brown glass	**Air capacity IEC point**	310	420	580	720	F8 Charcoal filter
Controls	**Pressure**	440	500	540	550	**Cod. 112.0615.733**
Touch control	**Input**	175	220	255	270	Remote control
Lighting	**Noise level**	52	56	62	65	**Cod. 112.0252.439**
LED lights						Recycling version kit WH
Grease filter						**Cod. 112.0252.442**
Cassettes dishwasher safe						Recycling version kit BK
Ø of air outlet						**Cod. 112.0158.127**
150 / 120 mm						FHP8 Charcoal filter High Performance
Width						**Cod. 112.0185.278**
800 mm						FLL8 Charcoal filter Long Lasting
Energy class						
A+						

T-AIR

AIR RANGE

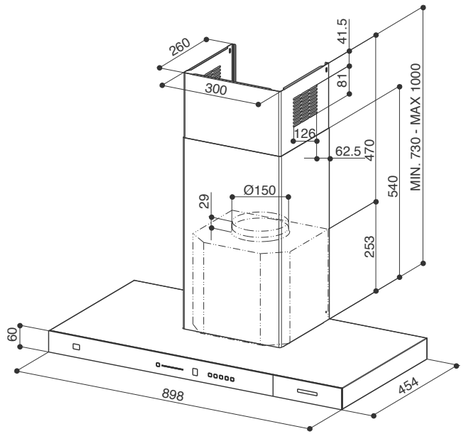

T-AIR

T-AIR KL A90 cod. 325.0615.702

FABER CLOUD · AIR QUALITY SENSOR · K-LINK · INTENSIVE SPEED · NEW REMOTE CONTROL (optional) · LED LIGHT · A+ ENERGY

FEATURES	PERFORMANCE					ACCESSORIES
Finish	**Speed**	1	2	3	INT	**Cod. 112.0157.243**
• Black and light brown glass	**Air capacity IEC point**	300	420	580	700	F9 Charcoal filter
Controls	**Pressure**	410	460	500	520	**Cod. 112.0615.733**
Touch control	**Input**	190	230	255	270	Remote control
Lighting	**Noise level**	52	59	66	69	**Cod. 112.0185.276**
1 LED light bar						FLL9 Charcoal filter Long Lasting
Grease filter						**Cod. 112.0157.271**
Cassettes dishwasher safe						Splashback X 900 mm
Ø of air outlet						**Cod. 112.0621.232**
150 / 120 mm						Upper chimney kit BK MATT H990
Width						**Cod. 112.0626.902**
900 mm						Kit recycling wall T-Shape
Energy class						
A+						

C-AIR

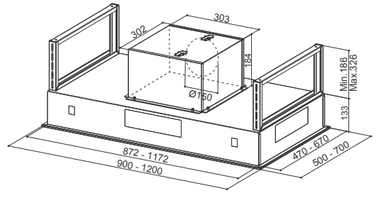

C-AIR

C-AIR KL A90 cod. 350.0615.705

FABER CLOUD · AIR QUALITY SENSOR · K-LINK · REMOTE BLOWER (optional) · PERIMETER ASPIRATION · INTENSIVE SPEED · DELAY 30 · HOUR 24 · FILTER ALARM · NEW REMOTE CONTROL · LED LIGHT · ENERGY A

FEATURES	PERFORMANCE					ACCESSORIES
Finish	**Speed**	1	2	3	INT	**Cod. 112.0157.240**
• Black and light brown glass	**Air capacity IEC point**	290	400	560	700	F8 Charcoal filter
Controls	**Pressure**	430	490	530	560	**Cod. 112.0158.127**
Touch / Control Touch	**Input**	190	230	255	270	FHP8 Charcoal filter High Performance
Lighting	**Noise level**	53	62	70	72	**Cod. 112.0185.278**
LED lights						FLL8 Charcoal filter Long Lasting
Grease filter						**Cod. 112.0327.007**
Cassettes dishwasher safe						ENERGY Remote blower kit
Ø of air outlet						
220 x 90 mm						
Width						
900 mm						
Energy class						
A						

BI-AIR

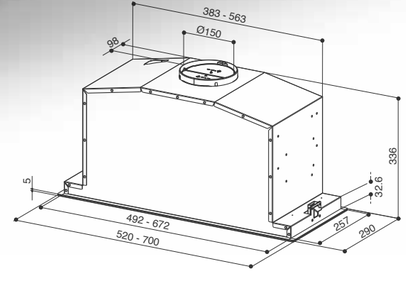

BI-AIR

BI-AIR KL A52 cod. 305.0615.686
BI-AIR KL A70 cod. 305.0615.687

FABER CLOUD · AIR QUALITY SENSOR · K-LINK · REMOTE BLOWER (optional) · PERIMETER ASPIRATION · INTENSIVE SPEED · NEW REMOTE CONTROL · LED LIGHT

FEATURES	PERFORMANCE					ACCESSORIES
Finish	**Speed**	1	2	3	INT	**Cod. 112.0157.240**
• Black and light brown glass	**Air capacity IEC point**	290	420	580	670	F8 Charcoal filter
Controls	**Pressure**	410	480	520	540	**Cod. 112.0158.127**
Touch control	**Input**	190	230	255	270	FHP8 Charcoal filter High Performance
Lighting	**Noise level**	52	61	68	72	**Cod. 112.0185.278**
1 LED light bar						FLL8 Charcoal filter Long Lasting
Grease filter						**Cod. 112.0327.007**
Cassettes dishwasher safe						ENERGY Remote blower kit
Ø of air outlet						
150 / 120 mm						
Width						
520 / 700 mm						
Energy class						
B						

HOB EXTRACTOR

GALILEO NG	78
GALILEO 60	88
GALILEO SMART	84
HOO-B	92
HOO-B GLASS	92

GALILEO NG
DREAM

HOB EXTRACTOR

GALILEO.
Una cappa simplemente geniale.

A+++ ENERGY

THE MOST EFFICIENT.
The pinnacle of aesthetic perfection with the integration of cooktop and hood in a single product for outstanding performance.

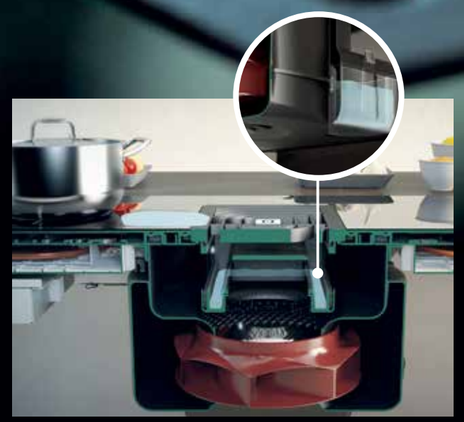

WATERPROOF

MAXIMUM SAFETY IN THE KITCHEN.
Waterproof technology guarantees operation and safety even in the event of liquids spilling onto the cooktop. They do not interfere with the cooking and are collected in a special compartment below.

SUCTION SPEED

THE MOST EFFECTIVE.
With its clever fluid-dynamic design, Galileo stands out for its high collection capacity of up to 6.6 metres per second. Even the most persistent cooking vapours and smells are eliminated in just a few minutes.

EASY TO USE.
The cooktop surface is smooth and seamless allowing dirt to be removed in one simple step.

SPACE SAVING

SPACE SAVING.
In the base cabinet Galileo has a smart drawer where you can easily storage cooking utensils.

TOUCHSLIDER

EASY TO USE.
The convenient and user-friendly touch slider controls allow you to adjust the cooking zones and the suction level with a simple action.

[2] BRIDGE ZONE

UNLEASH YOUR CREATIVITY.
The cooking zones can be activated in combined mode to use them together with the same level of power, ideal for cooking food in large pots.

USEFUL
The grease filter is extremely efficient and is also functional because it works as the first barrier and can collect up to 0.5 litres of liquid. It is easily removable and dishwasher-safe.

HOB EXTRACTOR

GALILEO CAN FIT IN 60/70 CM DEEP WORKTOP

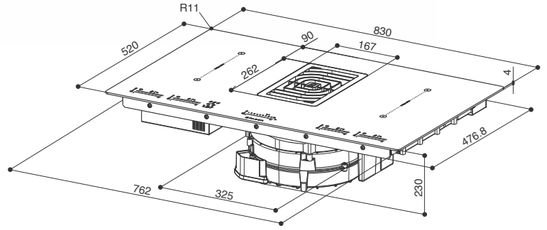

STANDARD INSTALLATION

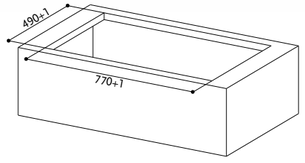

FLUSH FIT INSTALLATION

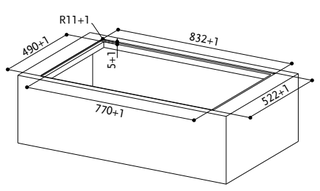

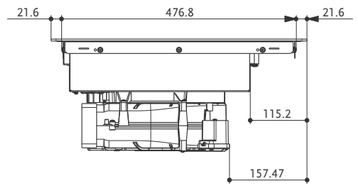

ALWAYS TO COMBINE 1 OF THE 3 INSTALLATION KIT:

Ducting cod.112.0540.782

Rear ducting version installation

Lateral ducting version installation

Recycling

cod. 112.0540.730 60 - 80 mm height skirting board
cod. 112.0540.781 100 mm height skirting board

Front recycling version installation 60H and H100

GALILEO NG

GALILEO BK GLASS NG A830 cod. 340.0594.624

Discover the product video
on our YouTube channel
[faberairmatters]

WATERPROOF · AUTOMATIC FUNCTION · BRUSHLESS · BOOST · INTENSIVE SPEED · SUCTION SPEED

A+++ ENERGY

FEATURES HOOD	PERFORMANCE HOOD
Finish • Black glass / Cast iron grid	
Controls Touch slider	
Grease filter Cassettes dishwasher safe	
Ø of air outlet 220x90 mm	
Energy class A+++	
Suction speed 6.6 m/s	

PERFORMANCE HOOD						
Speed	1	2	3	8	INT	BOOST
Air capacity IEC point	245	285	350	505	550	700
Pressure	290	370	525	550	555	560
Input	35	45	65	130	140	220
Noise level	51	55	57	65	66	72

[2] BRIDGE ZONE · SPACE SAVING · BOOSTER · TIMER

FEATURES INDUCTION HOB	FUNCTIONS INDUCTION HOB
Finish • Black glass	
Product dimensions LxW (mm) 830x520	
Induction zone 4 2100-3700 W single 4200-7400 W bridged	
Induction zone dimensions (mm) 230x210 single 460x210 bridge	
Controls Touch slider	
Power (W) 7400	
Voltage (V) 220-240	
Frequency (HZ) 50/60	

FUNCTIONS INDUCTION HOB	
Bridge zones	2
Power setting (stages)	9
Timer min-max	1-59 min.
Booster (P)	Yes
Auto switch off	Yes
Over temperature protection	Yes
Over current or voltage abnormality protection	Yes
Container detection system	Yes
Automatic shutdown protection	Yes
Power On indicator	Yes
Childlook	Yes

GALILEO SMART
EMOTION

HOB EXTRACTOR

GALILEO CAN FIT IN 60/70 CM DEEP WORKTOP

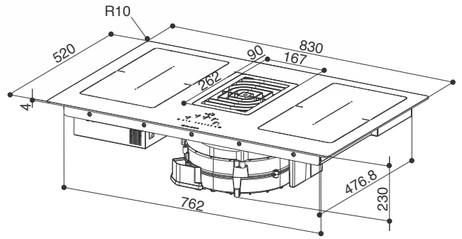

STANDARD INSTALLATION

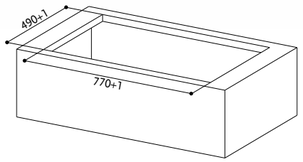

FLUSH FIT INSTALLATION

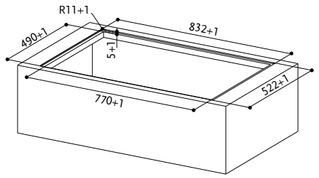

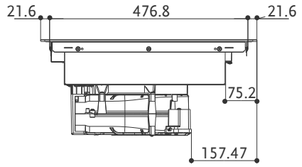

ALWAYS COMBINE TO GALILEO SMART BK cod. 340.0577.694 1 OF THE 3 INSTALLATION KIT:

Ducting cod.112.0540.782

Rear ducting version installation

Lateral ducting version installation

Recycling

cod. 112.0540.730 60 - 80 mm height toe kick
cod. 112.0540.781 100 mm altezza height toe kick

Front recycling version installation H60 and H100

further specications in the accessory sessions

GALILEO SMART

GALILEO SMART BK GLASS A830 cod. 340.0577.694

WATERPROOF · AUTOMATIC FUNCTION · BRUSHLESS · BOOST · INTENSIVE SPEED · SUCTION SPEED · A++ ENERGY

FEATURES HOOD	PERFORMANCE HOOD

Finish
- Black glass / Cast iron grid

Controls
Touch control

Grease filter
Cassettes dishwasher safe

Ø of air outlet
220x55 mm

Energy class
A++

Suction speed
6.6 m/s

Speed	1	2	3	8	INT	BOOST
Air capacity IEC point	245	285	350	505	550	700
Pressure	290	370	525	550	555	560
Input	35	45	65	130	140	220
Noise level	51	55	57	65	66	72

[2] BRIDGE ZONE · SPACE SAVING · BOOSTER · TIMER · POWER MANAGEMENT

FEATURES INDUCTION HOB	FUNCTIONS INDUCTION HOB

Finish
- Black glass

Product dimensions LxW (mm)
830x520

Induction zone
4

2100-3000 W single
3000-3700 W bridged

Induction zone dimensions (mm)
210x190 single
210x390 bridge

Controls
Touch control

Max Power (W)
7400

Voltage (V)
220-240

Frequency (HZ)
50/60

Bridge zones	2
Power setting (stages)	9
Timer min-max	1-59 min.
Booster (P)	Yes
Auto switch off	Yes
Over temperature protection	Yes
Over current or voltage abnormality protection	Yes
Container detection system	Yes
Automatic shutdown protection	Yes
Power On indicator	Yes
Childlook	Yes
Power menagement	Yes

ADJUSTABLE ABSORPTION SETTING ON 4 POWER LEVELS (KW)

- 2,8
- 3,5
- 4,5
- 7,4

GALILEO 60
SMILE

HOB EXTRACTOR

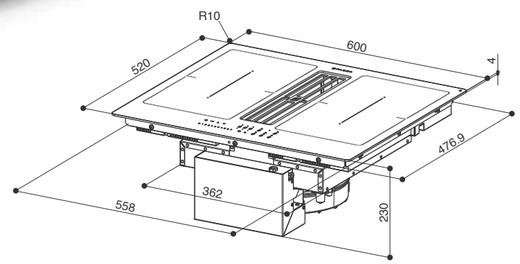

GALILEO CAN FIT IN 60/70 CM DEEP WORKTOP

STANDARD INSTALLATION

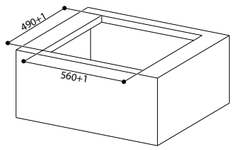

FLUSH FIT INSTALLATION

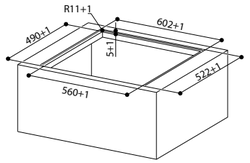

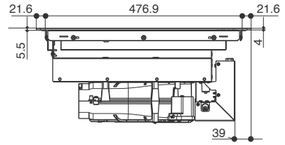

ALWAYS COMBINE TO GALILEO SMART BK A600 cod. 340.0627.227 1 OF THE 3 INSTALLATION KIT:

Ducting cod.112.0540.782

Rear ducting version installation

Lateral ducting version installation

Recycling

cod. 112.0626.657 height toe kick 100 mm
cod. 112.0626.656 height toe kick 60-80 mm

Front recycling version installation H60 and H100

GALILEO 60

GALILEO SMART BK A600 cod. 340.0627.227

WATERPROOF · AUTOMATIC FUNCTION · BRUSHLESS · BOOST · INTENSIVE SPEED · A++ ENERGY

FEATURES HOOD

Finish
- Black glass / Steel grid

Controls
Touch control

Grease filter
Cassettes dishwasher safe

Ø of air outlet
220x55 mm

Energy class
A++

Suction speed
8.8 m/s

PERFORMANCE HOOD

Speed	1	2	3	4	5	6	7	8	9	BOOST
Air capacity IEC point	230	270	310	350	380	451	440	470	500	630
Pressure	280	370	500	570	580	590	600	610	620	630
Input	40	50	60	75	85	100	110	115	125	220
Noise level	49	51	55	57	60	62	63	64	65	71

BRIDGE ZONE · SPACE SAVING · BOOSTER · TIMER · POWER MANAGEMENT

FEATURES INDUCTION HOB

Finish
- Black glass

Product dimensions LxW (mm)
600x520

Induction zone
4

2100-3000 W single
3000-3700 W bridged

Induction zone dimensions (mm)
210x190 single
210x390 bridge

Controls
Touch control

Max Power (W)
7400

Voltage (V)
220-240

Frequency (HZ)
50/60

ADJUSTABLE ABSORPTION SETTING ON 4 POWER LEVELS (KW)

- 2,8
- 3,5
- 4,5
- 7,4

FUNCTIONS INDUCTION HOB

Bridge zones	2
Power setting (stages)	9
Timer min-max	1-59 min.
Booster (P)	Yes
Auto switch off	Yes
Over temperature protection	Yes
Over current or voltage abnormality protection	Yes
Container detection system	Yes
Automatic shutdown protection	Yes
Power On indicator	Yes
Childlook	Yes
Power menagement	Yes

Hoo-B Glass
Black glass

Hoo-B
Black glass / Aluminium

HOO-B COOKTOP,
THE NEXT-GENERATION FITTED HOOD

A sophisticated yet minimalist look for the new fitted HOO-B hood, which is embellished with a special aluminium trim that makes it even more stylish.
The glass panel fits over the hob without interrupting the continuity of its forms and lines, guaranteeing the utmost quality at all times. The Touch control commands also make it possible to operate the hood and induction hobs with the touch of a finger.
When in use, HOO-B opens, lifting its cover and revealing its extraction surface. When you have finished using it, the cover goes back down to create a single worktop again.
For those that love pure minimalism, the new model also comes in the HOO-B Glass version with no aluminium trim.

Wall installation

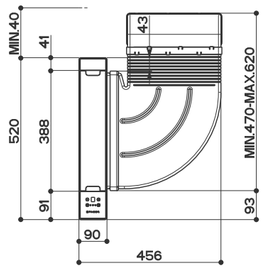

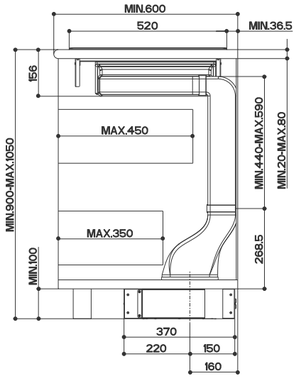

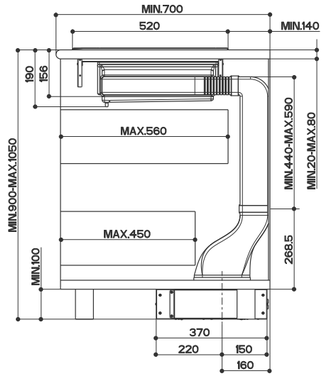

Island installation

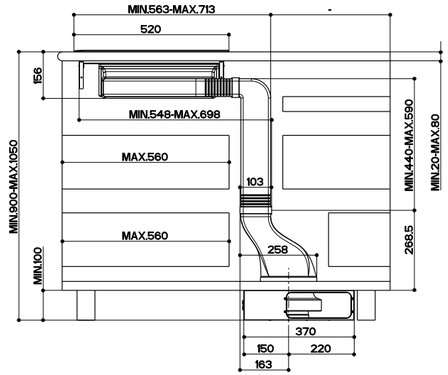

HOO-B
HOO-B GLASS

HOO-B BK/A A52 cod. 110.0456.212
HOO-B GLASS BK A52 cod. 110.0456.467

BRUSHLESS · WATERPROOF · INTENSIVE SPEED · DELAY 30 · FILTER ALARM · A+ ENERGY

FEATURES	PERFORMANCE					ACCESSORIES
Finish	**Speed**	1	2	3	INT	**Cod. 112.0470.541**
· Black glass / Aluminium · Black glass	**Air capacity IEC point**	415	480	540	600	Rectangular ducting recycling kit
Controls	**Pressure**	320	430	550	725	
Touch control	**Input**	55	85	115	145	
Lighting	**Noise level**	62	64	67	70	
-						
Grease filter						
Cassettes dishwasher safe						
Ø of air outlet						
220x90						
Width						
520 mm						
Energy class						
A+						

Hoo-B must be combined to FBH32 induction hobs.

Remove the glass cover before using the hood.

The Hoo-B hood attracts all cooking streams ensuring the maximum result of extraction completely built-in the kitchen top.

Installation mode

HOO-B

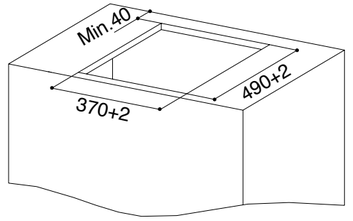

HOO-B + 1 FABER INDUCTION HOB FBH32

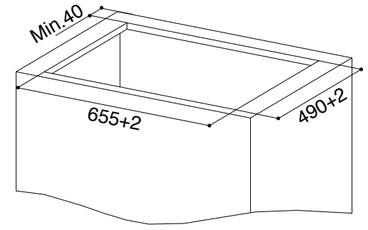

HOO-B + 2 FABER INDUCTION HOBS FBH32

HOO-B GLASS

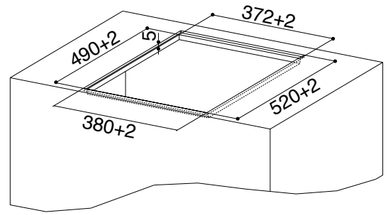

HOO-B GLASS + 1 FABER INDUCTION HOB FBH32
FLUSH FIT INSTALLATION

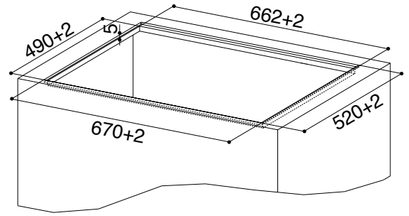

HOO-B + 2 FABER INDUCTION HOBS FBH32
FLUSH FIT INSTALLATION

WALL INSTALLATION

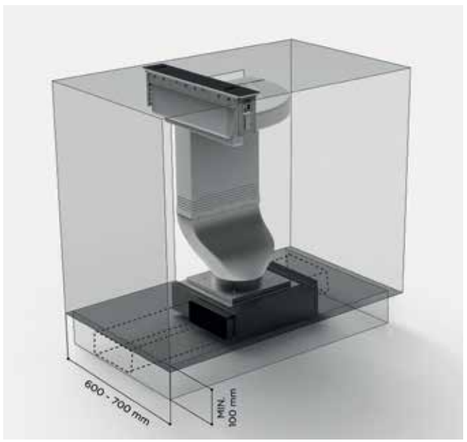

Air outlet adjustable on the right side or left side

ISLAND INSTALLATION

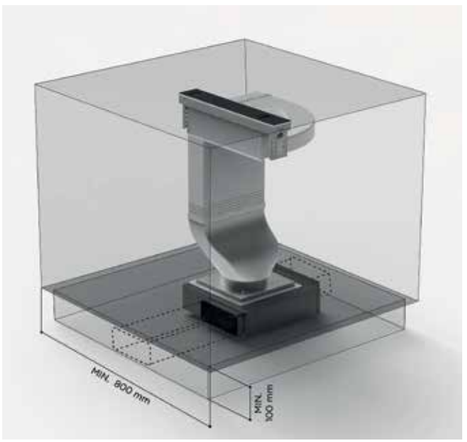

Air outlet adjustable on the right side or left side

SUSPENDED

BEAT	124
BELLE	106
BELLE PLUS	106
CÈLINE	110
CÈLINE PLUS	110
GLOW	102
GLOW PLUS	102
LYBRA PLUS	120
NEST PLUS	122
PAREO PLUS	121
ODETTE	114
ODETTE PLUS	114
SOFT CUBE	118
SKYLIFT	98
ZOOM PLUS	123

The Suspended cooker hoods were created to represent the perfect integration of design and wellbeing. The design is absolutely extraordinary and astounds the observer due to its ability to revolutionise the concept of cooker hood lighting, transforming it into a real point of light for the kitchen area.
The products are technologically advanced and perfectly shaped, offering the user freedom of movement within the cooking zone. In a simple movement, elegance becomes functionality.

SUSPENDED

SKYLIFT
DREAM

SUSPENDED

White Glass

Black Glass

IT MOVES DOWN TOWARDS THE HOB ONLY WHEN COOKING

The new SkyLift stands out for its glass surface with perimeter lighting that enhances its shape. Enhanced suction power strong of double ceramic filters and very low noise levels. Faber thus confirms that quietness of operation is one of the strengths of its hoods.

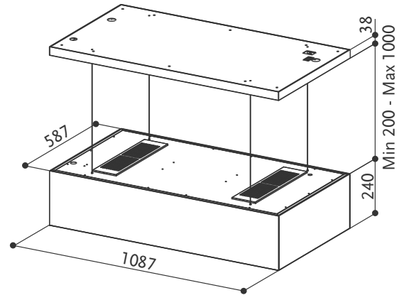

SKYLIFT

SKYLIFT WH F110 cod. 350.0587.910
SKYLIFT BK F110 cod. 350.0588.061

FEATURES	
Finish	
• White glass • Black glass	
Controls	
Electronic	
Lighting	
Perimeter LED light	
Grease filter	
Cassettes dishwasher safe	
Ø of air outlet	
-	
Width	
110 mm	
Energy class	
- *	

PERFORMANCE				
Speed	1	2	3	INT
Air capacity IEC point	260	375	500	550
Pressure*	-	-	-	-
Input*	-	-	-	-
Noise level	55	61	66	67

ACCESSORIES
Cod. 112.0548.448
(Ceramic filter included in the hood)

* Data not declared, as the model is exclusively available in the recycling version

GLOW PLUS
DREAM

EUROPEAN PRODUCT DESIGN AWARD

SUSPENDED

EUROPEAN PRODUCT DESIGN AWARD

Black gloss

White gloss

Glow equipped with Airlane ducting Kit optional

A TRULY BRIGHT IDEA
There's only a small step from Up&Down technology to functioning as an effective light fitting. The circular band around the base of this striking cylindrical hood illuminates the kitchen and highlights a striking yet refined design based on a white and black nickel gloss finish.
Impressive style complemented by the ultimate in Faber performance.

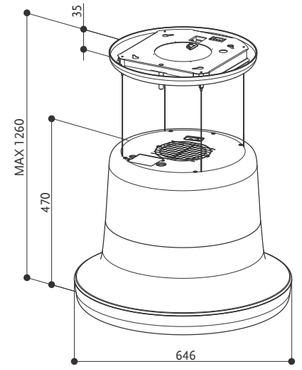

GLOW PLUS

UP & DOWN

GLOW PLUS BK GLOSS KL cod. 345.0541.007
GLOW PLUS WH GLOSS KL cod. 345.0541.008

GLOW

GLOW BK GLOSS KL cod. 345.0541.005
GLOW WH GLOSS KL cod. 345.0541.006

AIRLANE (optional) · K-LINK · PERIMETER ASPIRATION · INTENSIVE SPEED · DELAY 30 · HOUR 24 · NEW REMOTE CONTROL · LED LIGHT · A ENERGY

FEATURES	PERFORMANCE					ACCESSORIES
Finish • Black gloss • White gloss	**Speed**	1	2	3	INT	**Cod. 112.0157.240** F8 Charcoal filter
Controls Touch control	**Air capacity IEC point**	250	340	490	610	**Cod. 112.0158.127** FHP8 Charcoal filter High Performance
Lighting Perimetral LED light	**Pressure**	390	470	520	540	**Cod. 112.0185.278** FLL8 Charcoal filter Long Lasting
Grease filter Cassettes dishwasher safe	**Input**	160	200	240	250	**Cod. 112.0542.875** Airlane ducting kit
Ø of air outlet 150 mm	**Noise level**	51	55	63	68	
Width 646 mm						
Energy class A						

SUSPENDED

SUSPENDED

Gold / warm dark grey matt

Belle equipped with Airlane ducting Kit optional

ADVANCED TECHNOLOGY, UNIQUE DESIGN
As beautiful as its name suggests, the Belle hood features a design that is both eye-catching and elegant. Its double panel creates an effect reminiscent of the petals of a flower. Available in two refined finishes, the original, asymmetrically shaped Belle hood is made even more desirable by Up & Down action and by the technology that has made Faber the number one name in kitchen hoods.

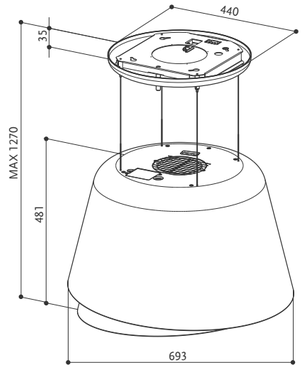

BELLE PLUS

UP & DOWN

BELLE PLUS BURGUNDY/GOLD KL cod. 345.0615.653
BELLE PLUS GOLD/WARM DG MATT KL cod. 345.0541.068

BELLE

BELLE BURGUNDY/GOLD KL cod. 345.0615.652
BELLE GOLD/WARM DG MATT KL cod. 345.0541.066

AIRLANE (optional) · K-LINK · PERIMETER ASPIRATION · INTENSIVE SPEED · DELAY 30 · HOUR 24 · NEW REMOTE CONTROL · LED LIGHT · A ENERGY

FEATURES	PERFORMANCE					ACCESSORIES
Finish • Burgundy/Gold • Gold / Warm dark grey matt	**Speed**	1	2	3	INT	**Cod. 112.0157.240** F8 Charcoal filter
Controls Touch control	**Air capacity IEC point**	250	340	490	610	**Cod. 112.0158.127** FHP8 Charcoal filter High Performance
Lighting Perimetral LED light	**Pressure**	390	470	520	540	**Cod. 112.0185.278** FLL8 Charcoal filter Long Lasting
Grease filter Cassettes dishwasher safe	**Input**	160	200	240	250	**Cod. 112.0542.875** Airlane ducting kit
Ø of air outlet 150 mm	**Noise level**	51	55	63	68	
Width 695 mm						
Energy class A						

SUSPENDED

CÈLINE PLUS
DREAM

SUSPENDED

Warm white / Country grey matt

Country grey matt

Cèline equipped with Airlane ducting Kit optional

THE CONICAL HOOD.
A MODERN CLASSIC.
A thin line of stainless steel embellishes the top part of this original, conical hood, which is also available with a bottom section in a different finish. The contemporary, essential design of Céline is made even more striking by Up& Down technology. The hood can be raised to the ceiling when not in use and lowered again whenever its extraordinary performance is needed. Céline comes in a choice of matt country grey and warm white.

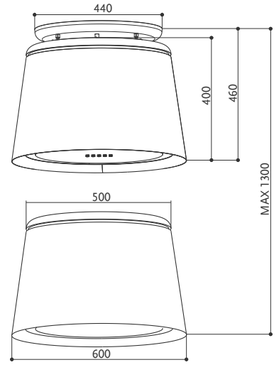

CÈLINE PLUS

UP & DOWN

CÈLINE PLUS CG MATT KL cod. 345.0541.063
CÈLINE PLUS WW/CG MATT KL cod. 345.0541.064

CÈLINE

CÈLINE CG MATT KL cod. 345.0541.061
CÈLINE WW/CG MATT KL cod. 345.0541.062

AIRLANE (optional) · K-LINK · PERIMETER ASPIRATION · INTENSIVE SPEED · 30 DELAY 30 · 24 HOUR 24 · REMOTE CONTROL · LED LIGHT · A ENERGY

FEATURES	PERFORMANCE					ACCESSORIES
Finish • Country grey matt • Warm white / Country grey matt	**Speed**	1	2	3	INT	**Cod. 112.0157.240** F8 Charcoal filter
Controls Touch control	**Air capacity IEC point**	250	340	490	610	**Cod. 112.0158.127** FHP8 Charcoal filter High Performance
Lighting Perimetral LED light	**Pressure**	390	470	520	540	**Cod. 112.0185.278** FLL8 Charcoal filter Long Lasting
Grease filter Cassettes dishwasher safe	**Input**	160	200	240	250	**Cod. 112.0542.875** Airlane ducting kit
Ø of air outlet 150 mm	**Noise level**	51	55	63	68	
Width 600 mm						
Energy class A						

SUSPENDED

SUSPENDED

Black matt

Grey matt

Odette equipped with Airlane ducting Kit optional

TECHNOLOGY IN CYLINDRICAL FORM
Matt black or matt grey? In either shade, the perfect cylinder that encloses Odette's high-tech heart adds a touch of unmistakable, contemporary style to any kitchen. Up&Down action makes Odette discrete, functional and able to satisfy the needs of every day cooking.

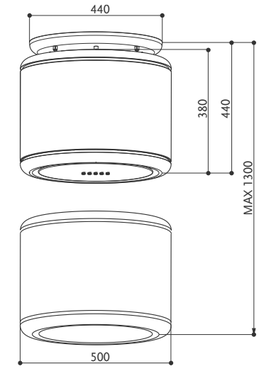

SUSPENDED

ODETTE PLUS

UP & DOWN

ODETTE PLUS BK MATT KL cod. 345.0541.053
ODETTE PLUS GREY MATT KL cod. 345.0541.054

ODETTE

ODETTE BK MATT KL cod. 345.0541.009
ODETTE GREY MATT KL cod. 345.0541.010

AIRLANE (optional) · K-LINK · PERIMETER ASPIRATION · INTENSIVE SPEED · 30 DELAY 30 · 24 HOUR 24 · NEW REMOTE CONTROL · LED LIGHT · A ENERGY

FEATURES	PERFORMANCE					ACCESSORIES
Finish • Black matt • Grey matt	**Speed**	1	2	3	INT	**Cod. 112.0157.240** F8 Charcoal filter
Controls Touch control	**Air capacity IEC point**	250	340	490	610	**Cod. 112.0158.127** FHP8 Charcoal filter High Performance
Lighting Perimetral LED light	**Pressure**	390	470	520	540	**Cod. 112.0185.278** FLL8 Charcoal filter Long Lasting
Grease filter Cassettes dishwasher safe	**Input**	160	200	240	250	**Cod. 112.0542.875** Airlane ducting kit
Ø of air outlet 150 mm	**Noise level**	51	55	63	68	
Width 500 mm						
Energy class A						

Nero Ingo

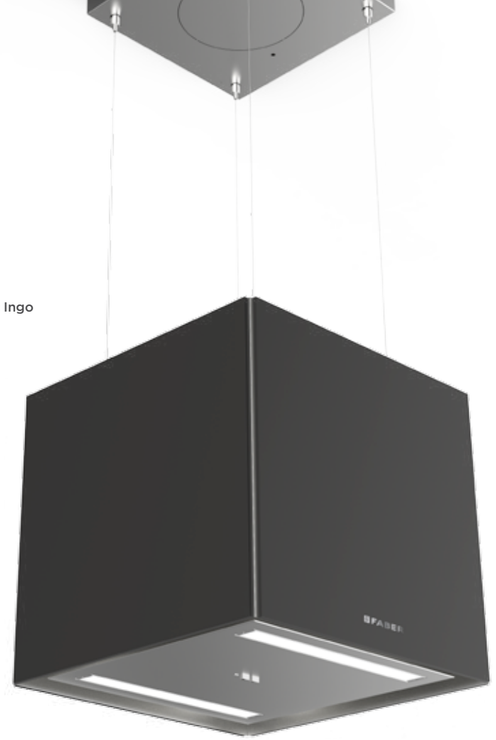

TOUCH & FEEL SURFACE WITH FENIX
SOFT CUBE The geometrically shaped Soft Cube light fitting solution is coated with Fenix®, a hi-tech material with unique characteristics that is soft to the touch, silky smooth, smudge-proof and water-repellent.
It is very easy to clean and perfectly integrates into modern and elegant kitchen environments.

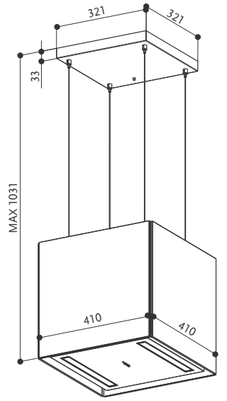

SUSPENDED

Bianco Kos

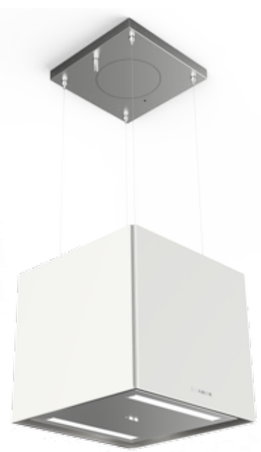

Grigio Londra

SOFT CUBE

SOFT CUBE BIANCO KOS F40 cod. 345.0607.586
SOFT CUBE GRIGIO LONDRA F40 cod. 345.0607.589
SOFT CUBE NERO INGO F40 cod. 345.0607.590

SOFT TOUCH · PERIMETER ASPIRATION · INTENSIVE SPEED · DELAY 30 · HOUR 24 · REMOTE CONTROL · LED LIGHT · ENERGY A

FEATURES	PERFORMANCE					ACCESSORIES
Finish • FENIX NTM Grigio Londra • FENIX NTM Bianco Kos • FENIX NTM Nero Ingo	**Speed**	1	2	3	INT	**Cod. 112.0157.240** F8 Charcoal filter
Controls Electronic	**Air capacity IEC point**	270	340	430	620	**Cod. 112.0158.127** FHP8 Charcoal filter High Performance
Lighting 2 LED lights	**Pressure**	400	460	530	560	**Cod. 112.0185.278** FLL8 Charcoal filter Long Lasting
Grease filter Cassettes dishwasher safe	**Input**	120	150	190	270	
Ø of air outlet 150 mm	**Noise level**	52	58	64	71	
Width 409 mm						
Energy class A						

Stainless steel / Glass

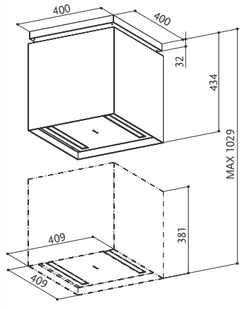

LYBRA PLUS

LYBRA PLUS KL cod. 110.0255.507

(only for white version)

FEATURES	PERFORMANCE				ACCESSORIES
Finish	**Speed**	1	2	3	INT	**Cod. 112.0157.240**
• Stainless steel / Glass	**Air capacity IEC point**	300	420	580	680	F8 Charcoal filter
Controls	**Pressure**	430	490	530	540	**Cod. 112.0158.127**
Electronic	**Input**	190	230	255	270	FHP8 Charcoal filter High Performance
Lighting	**Noise level**	50	59	65	69	**Cod. 112.0169.216**
2 LED lights						F-LIGHT ducting kit
Grease filter						**Cod. 112.0185.278**
Cassettes dishwasher safe						FLL8 Charcoal filter Long Lasting
Ø of air outlet						
150 mm						
Width						
409 mm						
Energy class						
A						

Stainless steel

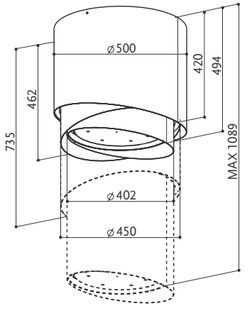

PAREO PLUS

PAREO PLUS KL cod. 345.0492.593
PAREO PLUS TIBETAN SILVER KL cod. 345.0492.594

FEATURES	PERFORMANCE					ACCESSORIES
Finish	**Speed**	1	2	3	INT	-
• Stainless steel • Tibetan silver	**Air capacity IEC point**	300	420	580	680	
Controls	**Pressure**	430	490	530	540	
Electronic	**Input**	190	230	255	270	
Lighting	**Noise level**	50	59	65	69	
Micro LED Lights						
Grease filter						
Cassettes dishwasher safe						
Ø of air outlet						
150 mm						
Width						
500 mm						
Energy class						
A						

Tibetan silver

The model is exclusively available in the extraction version

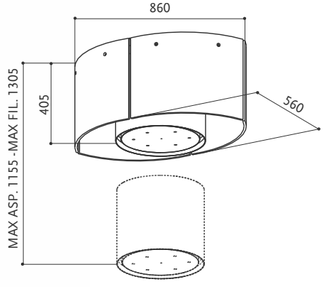

NEST PLUS

NEST PLUS KL cod. 345.0492.592
KIT 6 LED G9 2,5 W cod. 112.0505.117

FEATURES	PERFORMANCE				ACCESSORIES
Finish	**Speed**	1	2	3	INT	**Cod. 112.0157.240**
• Stainless steel / Glass	**Air capacity IEC point**	300	420	580	680	F8 Charcoal filter
Controls	**Pressure**	430	490	530	540	**Cod. 112.0158.127**
Electronic	**Input**	190	230	255	270	FHP8 Charcoal filter High Performance
Lighting	**Noise level**	50	59	65	69	**Cod. 112.0505.117**
Micro LED Lights						Kit 6 LED G9 2,5 W
Grease filter						**Cod. 112.0169.216**
Cassettes dishwasher safe						F-LIGHT ducting kit
Ø of air outlet						**Cod. 112.0185.278**
150 mm						FLL8 Charcoal filter Long Lasting
Width						
860 mm						
Energy class						
A						

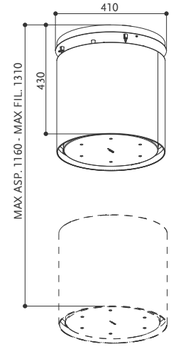

ZOOM PLUS

ZOOM PLUS cod. 345.0492.568

FEATURES	PERFORMANCE					ACCESSORIES
Finish	**Speed**	1	2	3	INT	**Cod. 112.0157.240**
• Stainless steel	**Air capacity IEC point**	270	340	430	620	F8 Charcoal filter
Controls	**Pressure**	400	460	530	560	**Cod. 112.0158.127**
Electronic	**Input**	120	150	190	270	FHP8 Charcoal filter High Performance
Lighting	**Noise level**	52	58	64	71	**Cod. 112.0169.216**
Micro LED Lights						F-LIGHT ducting kit
Grease filter						**Cod. 112.0185.278**
Cassettes dishwasher safe						FLL8 Charcoal filter Long Lasting
Ø of air outlet						
150 mm						
Width						
400 mm						
Energy class						
A						

SUSPENDED

Black matt

White matt

Dark grey matt

Dusty blue matt

FRESH AND SIMPLE LINES
Beat is a new model of suspended hood identified by fresh and simple lines with two panels arranged side-by-side. Available in four alluring matte colours.

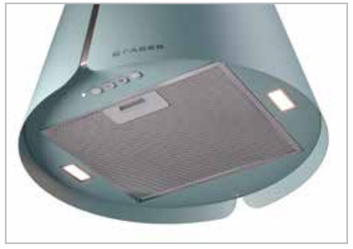

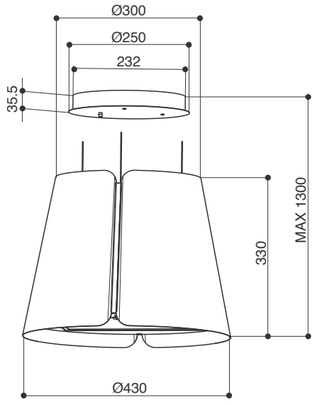

BEAT

BEAT BK MATT F45 cod. 345.0612.337
BEAT WH MATT F45 cod. 345.0612.338
BEAT DG MATT F45 cod. 345.0612.339
BEAT DB MATT F45 cod. 345.0612.340

INTENSIVE SPEED · LED LIGHT · A ENERGY

FEATURES	PERFORMANCE					ACCESSORIES
Finish • White matt • Black matt • Dark grey matt • Dusty blue matt	**Speed**	1	2	3	INT	**Cod. 112.0157.240** F8 Charcoal filter
Controls Electronic	**Air capacity IEC point**	320	430	600	720	**Cod. 112.0158.127** FHP8 Charcoal filter High Performance
Lighting 2 LED lights	**Pressure**	430	490	520	550	**Cod. 112.0185.278** FLL8 Charcoal filter Long Lasting
Grease filter Cassettes dishwasher safe	**Input**	190	230	255	270	
Ø of air outlet 150 mm	**Noise level**	54	61	68	73	
Width 430 mm						
Energy class A						

CEILING

INSIDE UP	130
HEAVEN 2.0	144
HEAVEN 2.0 FLAT	143
HEAVEN AIR	142
HEAVEN GLASS 2.0	145
HEAVEN GLASS 2.0 FLAT	143
HIGH-LIGHT	138
ONYX-C	134
SKYPAD 2.0	141

Progress is expressed in the extremely clear-cut design of a perfect hideaway structure. The innovative, minimal look make this model hood with ceiling installation a design item that hides high performance thanks to the perimeter suction technology employed. The perfect balance of function and form, where technology does its utmost to ensure comfort and practicality, with a discreet presence in the kitchen.

CEILING

CEILING

Stainless steel

White matt

ESSENTIAL AND ICONICAL STYLE
An iconical and extremely distinctive design turns the Inside-Up ceiling hood into a precious decor element, able to enhance interior design with the help of its unique and tunable light.

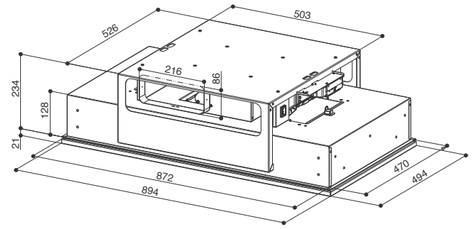

INSIDE UP

INSIDE UP IX KL A90 cod. 305.0615.739
INSIDE UP WH KL A90 cod. 305.0615.740

FEATURES	PERFORMANCE					ACCESSORIES
Finish • White matt • Stainless steel	**Speed**	1	2	3	INT	**Cod. 112.0471.608**
Controls Touch control	**Air capacity IEC point**	330	490	600	700	F18-90 Charcoal filter
Lighting Perimetral LED light	**Pressure**	150	310	510	700	
Grease filter Cassettes dishwasher safe	**Input**	30	65	115	145	
Ø of air outlet 150 / 120 mm	**Noise level**	56	65	70	73	
Width 900 mm						
Energy class B						

CEILING

Black Glass/Stainless steel

YOUR KITCHEN'S SILENT GUARDIAN.
Look up and you'll appreciate its linear design, but otherwise Onyx-C blends into the background, and all you notice is the pure air.
Onyx-C incorporates FABER's exclusive SIL & STILL technology. This new technology includes an Eco button that activates an ultra-silent mode to bring your kitchen maximum comfort with minimum energy consumption. The button's green light is the sole proof the system is working. The silence is broken only by applause for the Faber technology that places the hood in energy efficiency class A++.

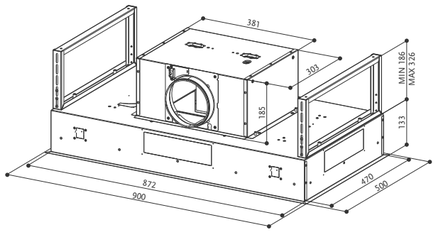

ONYX-C

ONYX-C X/V A90 cod. 350.0543.436

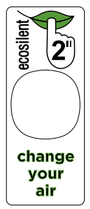

A++
52 DB(A) MAX CAPACITY

ECO FUNCTION:
change of air with minimum consumption and maximum silence.

FEATURES	PERFORMANCE						ACCESSORIES
Finish	**Speed**	1	2	3	INT	BOOST	**Cod. 112.0157.240**
• Black Glass / Stainless steel	**Air capacity IEC point**	230	320	430	600	780	F8 Charcoal filter
Controls	**Pressure**	420	450	430	470	520	**Cod. 112.0158.127**
Squarcle touch	**Input**	60	70	75	90	170	FHP8 Charcoal filter High Performance
Lighting	**Noise level**	40	47	52	61	67	**Cod. 112.0185.278**
LED light							FLL8 Charcoal filter Long Lasting
Grease filter							
Cassettes dishwasher safe							
Ø of air outlet							
150 / 120 mm							
Width							
900 mm							
Energy class							
A++							

HIGH-LIGHT
DREAM

Black Matt

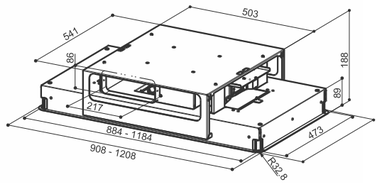

HIGH-LIGHT

HIGH-LIGHT X KL A91 cod. 110.0456.185
HIGH-LIGHT X KL A121 cod. 110.0456.205
HIGH-LIGHT WH MATT KL A91 cod. 110.0456.206
HIGH-LIGHT WH MATT KL A121 cod. 110.0456.207
HIGH-LIGHT BK MATT KL A91 cod. 350.0565.191
HIGH-LIGHT BK MATT KL A121 cod. 350.0565.192

FEATURES	PERFORMANCE					ACCESSORIES
Finish	**Speed**	1	2	3	INT	**Cod. 112.0471.608**
• Stainless steel • White matt • Black matt	**Air capacity IEC point**	165	350	490	700	F18-90 Charcoal filter
Controls	**Pressure**	40	150	320	700	**Cod. 112.0471.609**
Electronic Led	**Input**	10	30	65	145	F18-120 Charcoal filter
Lighting	**Noise level**	40	58	65	72	
Perimeter LED light						
Grease filter						
Cassettes dishwasher safe						
Ø of air outlet						
220 x 90 mm						
Width						
910 / 1210 mm						
Energy class						
A+						

Stainless steel

White matt

Model not built-in into the ceiling

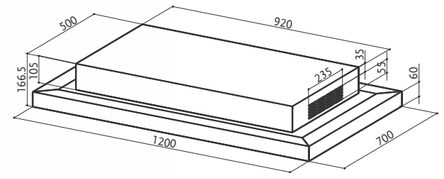

SKYPAD 2.0

SKYPAD 2.0 X/WH F120 cod. 110.0479.462

FEATURES	PERFORMANCE					ACCESSORIES
Finish	**Speed**	1	2	3	INT	-
• Stainless steel / White glass	**Air capacity IEC point**	440	600	780	850	
Controls	**Pressure***	-	-	-	-	
Electronic Led	**Input**	60	90	140	180	
Lighting	**Noise level**	57	64	70	72	
2 LED lights						
Grease filter						
Cassettes dishwasher safe						
Ø of air outlet						
-						
Width						
1200 mm						
Energy class						
- *						
Blowers						
2						

* Data not declared, as the model is exclusively available in the recycling version.

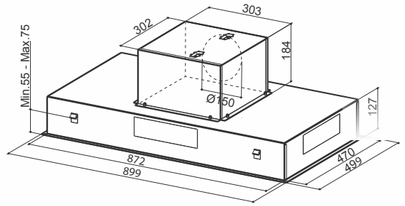

HEAVEN AIR

HEAVEN AIR X KL A90 cod. 350.0615.707

FABER CLOUD · AIR QUALITY SENSOR · K-LINK · REMOTE BLOWER · PERIMETER ASPIRATION · INTENSIVE SPEED · DELAY 30 · HOUR 24 · FILTER ALARM · NEW REMOTE CONTROL · LED LIGHT · ENERGY A

(optional)

FEATURES	PERFORMANCE					ACCESSORIES
Finish	**Speed**	1	2	3	INT	**Cod. 112.0157.240**
• Stainless steel	**Air capacity IEC point**	290	400	560	700	F8 Charcoal filter
Controls	**Pressure**	430	490	530	560	**Cod. 112.0327.007**
Electronic Led	**Input**	190	230	255	270	ENERGY Remote blower kit
Lighting	**Noise level**	53	62	70	72	**Cod. 112.0158.127**
4 LED lights						FHP8 Charcoal filter High Performance
Grease filter						**Cod. 112.0185.278**
Cassettes dishwasher safe						FLL8 Charcoal filter Long Lasting
Ø of air outlet						
150 / 120 mm						
Width						
900 mm						
Energy class						
A						

White matt

Heaven Glass 2.0 Flat

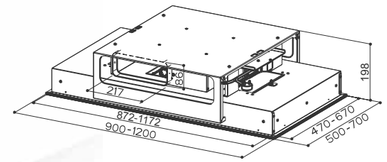

Heaven 2.0 Flat

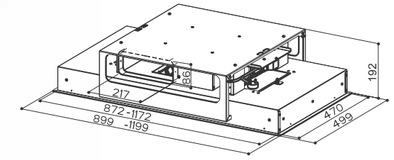

HEAVEN GLASS 2.0 FLAT
HEAVEN 2.0 FLAT

HEAVEN GLASS 2.0 WH FLAT A90 cod. 110.0428.440
HEAVEN GLASS 2.0 WH FLAT A120 cod. 110.0428.451
HEAVEN 2.0 X FLAT A90 cod. 110.0428.452
HEAVEN 2.0 X FLAT A120 cod. 110.0428.453

HEAVEN GLASS 2.0 WH KL A90 cod. 350.0621.962 *
HEAVEN 2.0 X FLAT KL A90 cod. 350.0621.961 *

* K-LINK

BRUSHLESS · PERIMETER ASPIRATION · INTENSIVE SPEED · DELAY 30 · HOUR 24 · FILTER ALARM · NEW REMOTE CONTROL · LED LIGHT · ENERGY A+

FEATURES	PERFORMANCE					ACCESSORIES
Finish	**Speed**	1	2	3	INT	**Cod. 112.0471.608**
• White glass • Stainless steel	**Air capacity IEC point**	165	350	490	700	FLL18-90 Charcoal filter Long Lasting
Controls	**Pressure**	40	150	320	700	**Cod. 112.0471.609**
Electronic Led	**Input**	10	30	65	145	FLL18-120 Charcoal filter Long Lasting
Lighting	**Noise level**	40	58	65	72	
2 LED lights 4 LED lights (s. steel model)						
Grease filter						
Cassettes dishwasher safe						
Ø of air outlet						
220 x 90 mm						
Width						
900 / 1200 mm						
Energy class						
A+						

Stainless steel

Air outlet adjustable in 4 positions

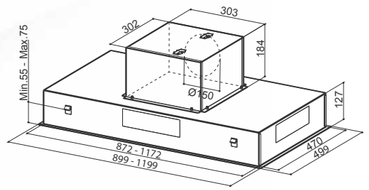

HEAVEN 2.0

HEAVEN 2.0 EV8+ X 90 cod. 110.0315.792
HEAVEN 2.0 EV8+ X 120 cod. 110.0315.794

HEAVEN 2.0 X KL A90 cod. 350.0621.950 *

REMOTE BLOWER · PERIMETER ASPIRATION · INTENSIVE SPEED · DELAY 30 · HOUR 24 · FILTER ALARM · REMOTE CONTROL · LED LIGHT · ENERGY

(optional)

FEATURES	PERFORMANCE				ACCESSORIES
Finish	**Speed**	1	2	3	INT	**Cod. 112.0157.240**
• Stainless steel	**Air capacity IEC point**	290	400	560	700	F8 Charcoal filter
Controls	**Pressure**	430	490	530	560	**Cod. 112.0327.007**
Electronic Led	**Input**	190	230	255	270	ENERGY Remote blower kit
Lighting	**Noise level**	53	62	70	72	**Cod. 112.0158.127**
4 LED lights						FHP8 Charcoal filter High Performance
Grease filter						**Cod. 112.0185.278**
Cassettes dishwasher safe						FLL8 Charcoal filter Long Lasting
Ø of air outlet						
150 / 120 mm						
Width						
900 / 1200 mm						
Energy class						
A						

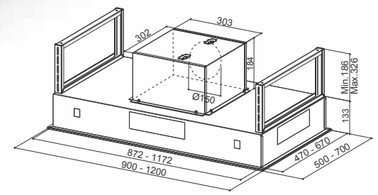

Air outlet adjustable in 4 positions

HEAVEN GLASS 2.0

HEAVEN GLASS 2.0 EV8+ WH A90 cod. 110.0315.503
HEAVEN GLASS 2.0 EV8+ WH A120 cod. 110.0374.230

HEAVEN GLASS 2.0 WH KL A90 cod. 350.0621.946
HEAVEN GLASS 2.0 WH 90 RB cod. 110.0360.434

REMOTE BLOWER · PERIMETER ASPIRATION · INTENSIVE SPEED · DELAY 30 · HOUR 24 · FILTER ALARM · REMOTE CONTROL · LED LIGHT · ENERGY

(opcional)

FEATURES	PERFORMANCE				ACCESSORIES
Finish	**Speed**	1	2	3	INT	**Cod. 112.0327.007**
• White glass	**Air capacity IEC point**	290	400	560	700	ENERGY Remote blower kit
Controls	**Pressure**	430	490	530	560	**Cod. 112.0185.278**
Electronic Led	**Input**	190	230	255	270	FLL8 Charcoal filter Long Lasting
Lighting	**Noise level**	53	62	70	72	
2 LED lights						
Grease filter						
Cassettes dishwasher safe						
Ø of air outlet						
150 mm						
Width						
900 / 1200 mm						
Energy class						
A						

DOWNDRAFT

FABULA PLUS 60 149
FABULA PLUS 90 148

Progress is expressed in the extremely clear-cut design of a perfect hideaway structure. The innovative, minimal look make this model hood with ceiling installation a design item that hides high performance thanks to the perimeter suction technology employed. The perfect balance of function and form, where technology does its utmost to ensure comfort and practicality, with a discreet presence in the kitchen.

DOWNDRAFT

Stainless steel / Black glass

Air outlet adjustable in 4 positions, front or rear side

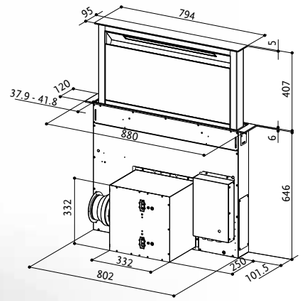

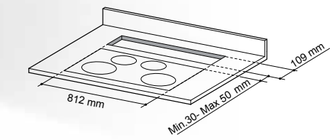

FABULA PLUS 90

FABULA PLUS EV8+ BK A90 cod. 340.0492.566
FABULA PLUS EV8+ WH A90 cod. 340.0492.567
FABULA BK 90 RB cod. 110.0360.581

REMOTE BLOWER (optional) · PERIMETER ASPIRATION · INTENSIVE SPEED · DELAY 30 · HOUR 24 · FILTER ALARM · NEW REMOTE CONTROL (optional) · LED LIGHT DIMMER · LED LIGHT · ENERGY A

FEATURES	PERFORMANCE					ACCESSORIES
Finish • Stainless steel / Black glass • Stainless steel / White glass	**Speed**	1	2	3	4	INT	**Cod. 112.0261.258** F12 Charcoal filter
Controls EVO Touch control	**Air capacity IEC point**	160	290	350	439	700	**Cod. 112.0615.733** Remote control
Lighting LED lights	**Pressure**	100	390	460	540	560	**Cod. 112.0327.008** Remote blower kit Fabula
Grease filter Cassettes dishwasher safe	**Input**	55	120	155	210	270	**Cod. 112.0470.541*** Rectangular ducting recycling kit
Ø of air outlet 150 / 120	**Noise level**	40	53	54	60	70	
Width 900 mm							
Energy class A							

Stainless steel / White glass

*** To be purchased in addition or as an alternative to the charcoal filter**

Air outlet adjustable in 4 positions, front or rear side

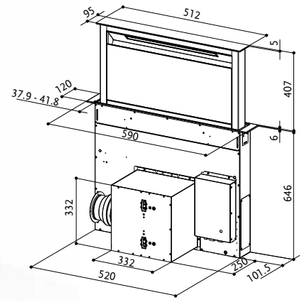

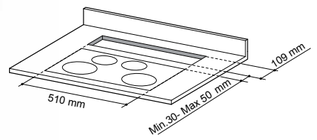

FABULA PLUS 60

FABULA PLUS EVO+BK A60 cod. 340.0582.936

REMOTE BLOWER (optional) · PERIMETER ASPIRATION · INTENSIVE SPEED · DELAY 30 · HOUR 24 · FILTER ALARM · NEW REMOTE CONTROL (optional) · LED LIGHT DIMMER · LED LIGHT

FEATURES	PERFORMANCE						ACCESSORIES
Finish • Stainless steel / Black glass	**Speed**	1	2	3	4	INT	**Cod. 112.0629.411** F12 KIT 2 C.F. FABULA 60cm
Controls EVO Touch control	**Air capacity IEC point**	150	280	350	440	630	**Cod. 112.0615.733** Remote control
Lighting LED lights	**Pressure**	120	420	490	550	630	**Cod. 112.0327.008** Remote blower kit Fabula
Grease filter Cassettes dishwasher safe	**Input**	55	120	155	190	270	**Cod. 112.0470.541*** Rectangular ducting recycling kit
Ø of air outlet 150 / 120	**Noise level**	43	56	60	65	72	
Width 600 mm							
Energy class B							

*** To be purchased in addition or as an alternative to the charcoal filter**

WALL

BELLA COMFORT	206	PREMIO ANGOLO/SP	234
CHLOÈ	218	PYANA	176
CHLOÈ XL	272	RAY	211
COCKTAIL	196	SOFT EDGE	152
CUBIA PLUS	217	SOFT SLIM	155
CUBIA GLOSS PLUS	217	STEELMAX	194
CYLINDRA	214	STILO COMFORT	207
CYLINDRA GLOSS PLUS	215	STILO GLASS SMART	208
DAISY PLUS	195	STILO SMART	209
ECLIPSE	216	STRIP SMART EV8	228
GRÈXIA	192	STRIP SMART PB	229
GLAM-FIT	184	SOLARIS	235
GLAM FIT ZERO DRIP	166	SYNTHESIS	231
GLAM FIT ZERO DRIP PLUS	156	T-DARK	202
GLAM-LIGHT	188	T-LIGHT	205
GLAM LIGHT ZERO DRIP	162	TALÌKA	180
GLAM LIGHT ZERO DRIP PLUS	160	TENDER	230
LITHOS	212	THEA	224
NICE	210	TWEET	197
ONYX-T	198	TWICE	172
ONYX-V	168	VALUE	232

The form and precious materials of our wall hood designs have been carefully studied to be visually pleasant and to last over time.
They utilise powerful motorisation and refined aspiration systems to guarantee clean air and silence.
Our hoods provide useful special functions for a clean environment, to keep your home under control, to leave you free to manage creativity in your kitchen.

WALL

Nero Ingo

CHIMNEY INCLUDED

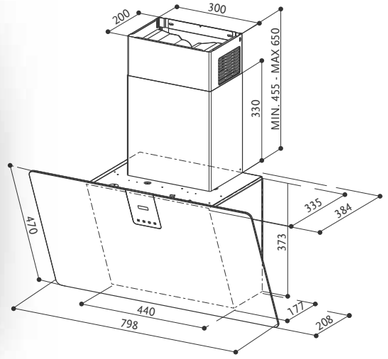

To be installed at a minimum distance from the hob of **50 cm.**

SOFT EDGE

SOFT EDGE GRIGIO LONDRA A80 cod. 330.0597.527
SOFT EDGE BIANCO KOS A80 cod. 330.0597.528
SOFT EDGE NERO INGO A80 cod. 330.0597.526

SOFT TOUCH · INTENSIVE SPEED · REMOTE CONTROL (optional) · LED LIGHT

A+ ENERGY

FEATURES	PERFORMANCE					ACCESSORIES
Finish	**Speed**	1	2	3	INT	**Cod. 112.0157.240**
• FENIX NTM Grigio Londra • FENIX NTM Bianco Kos • FENIX NTM Nero Ingo	**Air capacity IEC point**	310	420	580	720	F8 Charcoal filter
Controls	**Pressure**	440	500	540	550	**Cod. 112.0252.439**
Touch control	**Input**	175	220	255	270	Recycling version kit WH
Lighting	**Noise level**	52	56	62	65	**Cod. 112.0252.442**
LED lights						Recycling version kit BK
Grease filter						**Cod. 112.0158.127**
Cassettes dishwasher safe						FHP8 Charcoal filter High Performance
Ø of air outlet						**Cod. 112.0185.278**
150 / 120 mm						FLL8 Charcoal filter Long Lasting
Width						
800 mm						
Energy class						
A+						

Bianco Kos

Grigio Londra

Bianco Kos

CHIMNEY INCLUDED

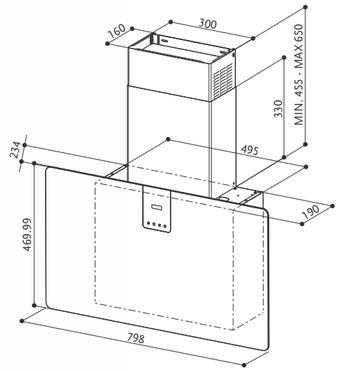

To be installed at a minimum distance from the hob of **50 cm.**

SOFT SLIM

SOFT SLIM GRIGIO LONDRA A80 cod. 330.0597.524
SOFT SLIM BIANCO KOS A80 cod. 330.0597.525
SOFT SLIM NERO INGO A80 cod. 330.0597.506

SOFT TOUCH · NAUTILUS · INTENSIVE SPEED · REMOTE CONTROL (optional) · LED LIGHT

A ENERGY

FEATURES	PERFORMANCE					ACCESSORIES
Finish	**Speed**	1	2	3	INT	**Cod. 112.0540.783**
• FENIX NTM Grigio Londra • FENIX NTM Bianco Kos • FENIX NTM Nero Ingo	**Air capacity IEC point**	190	250	400	570	F22 Charcoal filter
Controls	**Pressure**	300	450	540	650	
Touch control	**Input**	100	115	120	125	
Lighting	**Noise level**	52	58	67	73	
2 LED lights						
Grease filter						
Cassettes dishwasher safe						
Ø of air outlet						
150 / 120 mm						
Width						
800 mm						
Energy class						
A						

Nero Ingo

Grigio Londra

WALL

Black glass matt

Sand glass matt

Dusty blue glass matt

ELEGANCE AND DESIGN
Simply touch the exclusive "Zero Drip" button to activate the heaters located on the glass and inside the hood and actively prevent the formation of droplets of condensation, even in long cooking sessions.
The special matte surface and glossy details add an accent of elegant design in the best contemporary style.

CHIMNEY INCLUDED

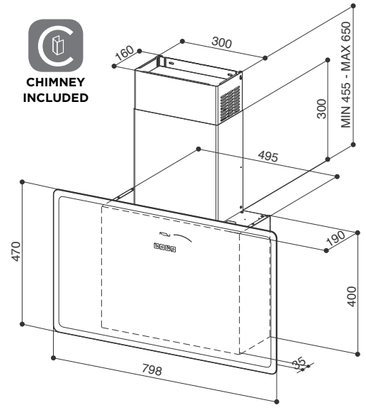

GLAM FIT ZERO DRIP PLUS

GLAM FIT ZERO DRIP PLUS SAND M A80 cod. 330.0615.736
GLAM FIT ZERO DRIP PLUS DB M A80 cod. 330.0615.737
GLAM FIT ZERO DRIP PLUS BK M A80 cod. 330.0615.738

ZERO DRIP · NAUTILUS · INTENSIVE SPEED · ANTITOUCH · LED LIGHT

A ENERGY

FEATURES	PERFORMANCE					ACCESSORIES
Finish	**Speed**	1	2	3	INT	**Cod. 112.0540.783**
• Sand glass matt • Dusty blue glass matt • Black glass matt	**Air capacity IEC point**	180	270	390	530	F22 Charcoal filter
Controls	**Pressure**	320	460	540	630	
Touch control	**Input**	100	110	115	125	
Lighting	**Noise level**	54	57	67	74	
2 LED lights						
Grease filter						
Cassettes dishwasher safe						
Ø of air outlet						
150 / 120 mm						
Width						
800 mm						
Energy class						
A						

Black glass matt

Sand glass matt

Dusty blue glass matt

ELEGANCE AND DESIGN
Simply touch the exclusive "Zero Drip" button to activate the heaters located on the glass and inside the hood and actively prevent the formation of droplets of condensation, even in long cooking sessions.
The special matte surface and glossy details add an accent of elegant design in the best contemporary style.

CHIMNEY INCLUDED

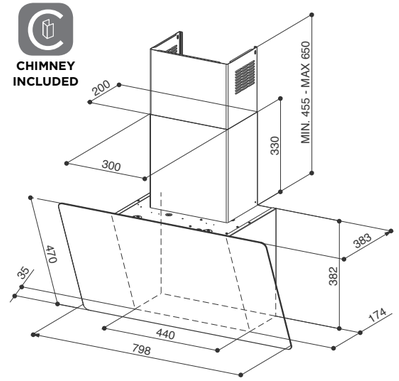

GLAM LIGHT ZERO DRIP PLUS

GLAM LIGHT ZERO DRIP PLUS S M A80 cod. 330.0615.681
GLAM LIGHT ZERO DRIP PLUS DB M A80 cod. 330.0615.734
GLAM LIGHT ZERO DRIP PLUS BK M A80 cod. 330.0615.735

ZERO DRIP · INTENSIVE SPEED · ANTITOUCH · LED LIGHT · A ENERGY

FEATURES	PERFORMANCE					ACCESSORIES
Finish • Sand glass matt • Dusty blue glass matt • Black glass matt	**Speed**	1	2	3	INT	**Cod. 112.0157.240** F8 Charcoal filter
Controls Touch control	**Air capacity IEC point**	300	410	560	690	**Cod. 112.0158.127** FHP8 Charcoal filter High Performance
Lighting LED lights	**Pressure**	410	450	500	520	**Cod. 112.0185.278** FLL8 Charcoal filter Long Lasting
Grease filter Cassettes dishwasher safe	**Input**	190	230	255	270	**Cod. 112.0252.439** Recycling version kit WH
Ø of air outlet 150 / 120 mm	**Noise level**	53	60	67	71	**Cod. 112.0252.442** Recycling version kit BK
Width 800 mm						
Energy class A						

GLAM LIGHT
ZERO DRIP

EMOTION

WALL

WALL

Sand glass

Dusty blue glass

Black glass

Zero Drip technology guarantees an effective anti-drip action in daily use by using a special aluminium element to collect the condensation that may form on the surface of the hood during cooking sessions.

CHIMNEY INCLUDED

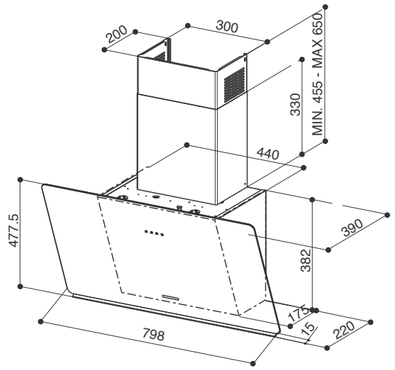

GLAM LIGHT ZERO DRIP

GLAM LIGHT ZERO DRIP SAND A80 cod. 330.0615.674
GLAM LIGHT ZERO DRIP DB A80 cod. 330.0615.675
GLAM LIGHT ZERO DRIP BK A80 cod. 330.0615.676

ZERO DRIP · INTENSIVE SPEED · LED LIGHT

FEATURES	PERFORMANCE					ACCESSORIES
Finish • Sand glass • Dusty blue glass • Black glass	**Speed**	1	2	3	INT	**Cod. 112.0157.240** F8 Charcoal filter
Controls Touch control	**Air capacity IEC point**	320	490	640	730	**Cod. 112.0252.439** Recycling version kit WH
Lighting LED lights	**Pressure**	340	450	480	520	**Cod. 112.0252.442** Recycling version kit BK
Grease filter Cassettes dishwasher safe	**Input**	145	180	230	250	**Cod. 112.0158.127** FHP8 Charcoal filter High Performance
Ø of air outlet 150 / 120 mm	**Noise level**	53	63	68	71	**Cod. 112.0185.278** FLL8 Charcoal filter Long Lasting
Width 800 mm						
Energy class B						

Sand glass

Black glass

Dusty blue glass

Zero Drip technology guarantees an effective anti-drip action in daily use by using a special aluminium element to collect the condensation that may form on the surface of the hood during some cooking phases.

CHIMNEY INCLUDED

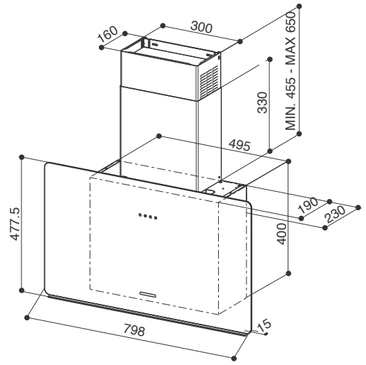

GLAM FIT ZERO DRIP

GLAM FIT ZERO DRIP SAND 80 cod. 330.0615.654
GLAM FIT ZERO DRIP DB 80 cod. 330.0615.655
GLAM FIT ZERO DRIP BK 80 cod. 330.0615.657

ZERO DRIP · NAUTILUS · INTENSIVE SPEED · LED LIGHT · A ENERGY

FEATURES

Finish
- Vetro sabbia
- Vetro blu polvere
- Black glass
- Sand glass
- Busty blue glass

Controls
Touch control

Lighting
2 LED lights

Grease filter
Cassettes dishwasher safe

Ø of air outlet
150 / 120 mm

Width
800 mm

Energy class
A

PERFORMANCE

	1	2	3	INT
Speed				
Air capacity IEC point	190	250	400	570
Pressure	300	450	540	650
Input	100	115	120	125
Noise level	52	58	67	73

ACCESSORIES

Cod. 112.0540.783
F22 Charcoal filter

WALL

Black glass / Stainless steel

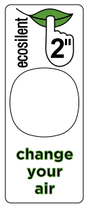

A++
52 DB(A) MAX CAPACITY

ECO FUNCTION:
change of air with minimum consumption and maximum silence.

THE POWER OF SILENCE.
A vertical hood with elegant, essential design on the outside and amazing innovation inside. Onyx-V features SIL & STILL technology to ensure a continuous exchange of air in the kitchen, in complete silence and with very low consumption.
Is it on or off? The only way to know the hood is working is the green function indicator, which turns off automatically after 24 hours. The impressive suction power and amazing silence of Onyx-V creates the ultimate comfort in your home. Onyx-V is as efficient as it is silent, and is rated energy class A++.

CHIMNEY INCLUDED

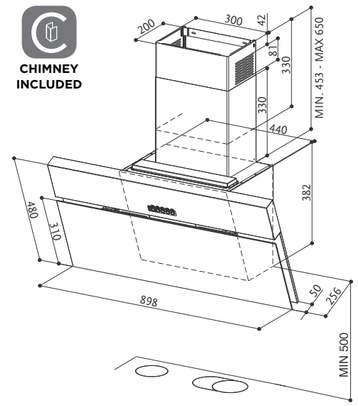

To be installed at a minimum distance from the hob of **50 cm.**

ONYX-V

ONYX-V X/V A90 cod. 330.0543.437

SIL & STILL · BRUSHLESS · PERIMETER ASPIRATION · BOOST · INTENSIVE SPEED · NEW REMOTE CONTROL · LED LIGHT

(optional)

A++ ENERGY

FEATURES	PERFORMANCE						ACCESSORIES
Finish	**Speed**	1	2	3	INT	BOOST	**Cod. 112.0157.240**
• Black glass / Stainless steel	**Air capacity IEC point**	210	310	370	590	780	F8 Charcoal filter
Controls	**Pressure**	390	400	420	480	530	**Cod. 112.0158.127**
Squarcle touch	**Input**	55	60	40	90	170	FHP8 Charcoal filter High Performance
Lighting	**Noise level**	46	51	52	63	69	**Cod. 112.0185.278**
2 LED lights							FLL8 Charcoal filter Long Lasting
Grease filter							**Cod. 112.0615.733**
Cassettes dishwasher safe							Remote control
Ø of air outlet							
150 / 120 mm							
Width							
900 mm							
Energy class							
A++							

WALL

Stainless steel / Black matt

900 mm

Black glass / Stainless steel

600 mm

FLAT ON THE OUTSIDE, ARIES TECHNOLOGY ON THE INSIDE. TWICE AS UNIQUE.
Twice is the perfect fusion of design and performance.
This flat vertical hood is the work of the designer who created the acclaimed Talika hood, and his unmistakable style emerges clearly from its rigorously essential lines. The glass from which it is made gives Twice the appearance of a latest-generation touch screen device. The hood's elegant, refined body encloses innovative, precision technology – a brand new Aries blower for superior suction. Maximum performance with minimum noise from a Faber masterpiece available in two different colours.

CHIMNEY INCLUDED

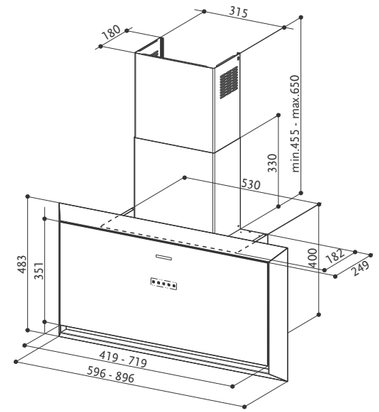

TWICE

TWICE ARIES X/BK MATT A60 cod. 330.0541.076
TWICE ARIES X/BK MATT A90 cod. 330.0541.073

TWICE ARIES BK GLASS/X A60 cod. 330.0541.074
TWICE ARIES BK GLASS/X A90 cod. 330.0541.075

ARIES · PERIMETER ASPIRATION · BOOST · INTENSIVE SPEED · NEW REMOTE CONTROL (optional) · LED LIGHT · A+ ENERGY

FEATURES
Finish
• Stainless steel / Black matt • Black glass / Stainless steel
Controls
Squarcle touch
Lighting
LED lights
Grease filter
Cassettes dishwasher safe
Ø of air outlet
150 / 120 mm
Width
600 / 900 mm
Energy class
A+
Blowers
2

PERFORMANCE					
Speed	1	2	3	INT	BOOST
Air capacity IEC point	180	250	430	500	610
Pressure	220	290	500	510	540
Input	50	70	140	150	280
Noise level	40	45	57	61	66

ACCESSORIES
Cod. 112.0540.783
F22 Charcoal filter (order 2 pieces)
Cod. 112.0615.733
Remote control

WALL

Black gloss / Black glass

White gloss / White glass

UNCOMPROMISING TECHNOLOGY AND DESIGN BY COLOMBO FOR A HOOD THAT GOES BEYOND INNOVATION.
The Pyana hood is the result of continuing collaboration between Faber and the internationally famous designer Carlo Colombo. This vertical hood offers the ultimate in style and performance.
Pyana features a precious, gloss-finish body with gently rounded corners and an internal glass panel with an exclusive opening system. The hood comes in two colour variants. Customers can also choose between two advanced blower technologies: Nautilus or the new Aries, both guaranteed to deliver superb efficiency with minimum consumption and, of course, maximum comfort.

Glossy chamfer on all frontal perimeter

CHIMNEY INCLUDED

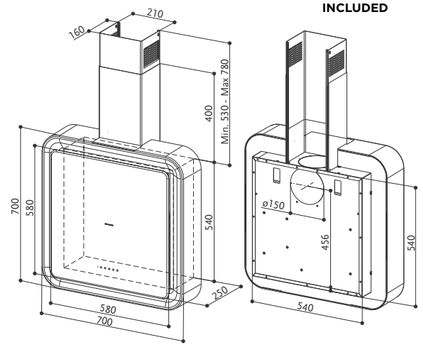

PYANA

PYANA ARIES WH A70 cod. 335.0541.003
PYANA ARIES BK/BK GLASS A70 cod. 335.0541.004

ARIES · REAR OUTLET · PERIMETER ASPIRATION · BOOST · INTENSIVE SPEED · REMOTE CONTROL (optional) · LED LIGHT · A+ ENERGY

Black gloss / Black glass

White gloss / White glass

FEATURES	PERFORMANCE					
Finish	**Speed**	1	2	3	INT	BOOST
• Black gloss / Black glass • White gloss / White glass	**Air capacity IEC point**	180	250	435	620	750
Controls	**Pressure**	210	280	490	520	550
Squarcle touch	**Input**	55	65	130	145	280
Lighting	**Noise level**	40	45	57	66	70
LED lights						
Grease filter						
Cassettes dishwasher safe						
Ø of air outlet						
150 / 120 mm						
Width						
700 mm						
Energy class						
A+						
Blowers						
2						

ACCESSORIES
Cod. 112.0540.783
F22 Charcoal filter (order 2 pieces)
Cod. 112.0615.733
Remote control

WALL

Dark grey matt - DG MATT

reddot award 2017
winner

IMPROVING ON PERFECTION.
Faber's famous vertical hood is re-inventing its role as "window over the hob" by adopting the latest Nautilus technology.
The new Nautilus blower not only improves performance but makes Talìka an even more desirable addition to your kitchen by reducing noise yet again. Unprecedented comfort from a lightweight, ultra-thin hood now available in new finishes.

Chimney finish:
RAL Design 000 85 00

CHIMNEY INCLUDED

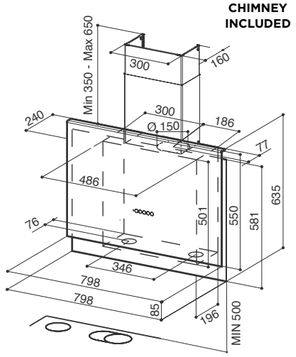

To be installed at a minimum distance from the hob of **50 cm.**

TALÌKA

TALÌKA OC A80 cod. 330.0540.784
TALÌKA CT A80 cod. 330.0540.785

TALIKA DG MATT A80 cod. 330.0543.972
TALÌKA DGC A80 cod. 330.0540.786

NAUTILUS · PERIMETER ASPIRATION · INTENSIVE SPEED · NEW REMOTE CONTROL (optional) · LED LIGHT

ENERGY A

Old copper - OC

Cross titanium - CT

Dark grey concrete - DGC

FEATURES	PERFORMANCE					ACCESSORIES
Finish	**Speed**	1	2	3	INT	**Cod. 112.0540.783**
• Old copper • Cross titanium • Dark grey concrete • Dark grey matt	**Air capacity IEC point**	200	300	410	560	F22 Charcoal filter
Controls	**Pressure**	360	470	560	650	**Cod. 112.0615.733**
Squarcle touch	**Input**	100	110	120	135	Remote control
Lighting	**Noise level**	51	59	66	72	
LED lights						
Grease filter						
Cassettes dishwasher safe						
Ø of air outlet						
150 / 120 mm						
Width						
800 mm						
Energy class						
A						

WALL

Black glass

800 mm

Grey glass

550 mm

550 mm

White glass

550 mm

A VERTICAL HOOD WITH THE LATEST NAUTILUS TECHNOLOGY.
Glamorous by name and nature, the Glam-Fit hood is characterised by a minimal, contemporary style that radiates elegance in every detail.
Its clean, essential lines, complemented by a glass surface and an elegant clear surround, add refinement to any kitchen and conceal Faber's exclusive Nautilus technology.
The first ever completely flat, vertical glass hood, Glam-Fit also features an ultra-thin body of only 15 cm. Impressive performance and miserly consumption place it in energy efficiency class A. Glam-Fit comes in two finishes, black and white, both equally striking and typically Faber. Glam-Fit is also available in a "small" 55 cm version.

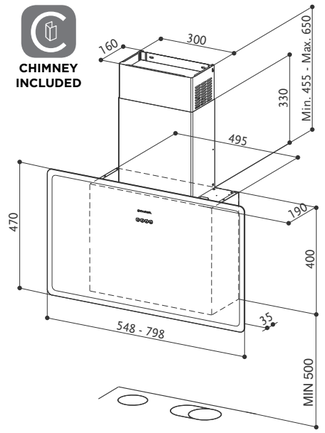

To be installed at a minimum distance from the hob of **50 cm.**

GLAM-FIT

GLAM FIT 80 BK cod. 330.0528.269
GLAM FIT 55 BK cod. 330.0528.270
GLAM FIT 80 WH cod. 330.0528.302
GLAM FIT 55 WH cod. 330.0528.301
GLAM FIT 80 GR cod. 330.0576.469
GLAM FIT 55 GR cod. 330.0576.470

NAUTILUS · INTENSIVE SPEED · LED LIGHT · NEW REMOTE CONTROL (optional only for grey version) · A ENERGY

FEATURES	PERFORMANCE					ACCESSORIES
Finish • Black glass • Grey glass • White glass	**Speed**	1	2	3	INT	**Cod. 112.0540.783** F22 Charcoal filter
Controls Touch control	**Air capacity IEC point**	190	250	400	570	**Cod. 112.0615.733** Remote control (only for grey version)
Lighting 2 LED lights	**Pressure**	300	450	540	650	
Grease filter Cassettes dishwasher safe	**Input**	100	115	120	125	
Ø of air outlet 150 / 120 mm	**Noise level**	52	58	67	73	
Width 550 / 800 mm						
Energy class A						

White/Warm gray 3C - WH/WG

Dark grey/Light grey - DG/LG

White/Transparent - WH/T

Warm gray 1C/Warm gray 3C - WG1C/WG3C

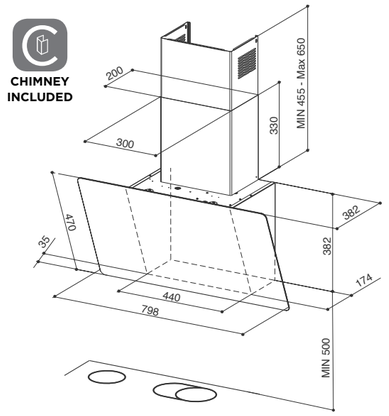

To be installed at a minimum distance from the hob of **50 cm.**

GLAM-LIGHT

GLAM-LIGHT EV8+ WH/WG A80 cod. 110.0456.116
GLAM-LIGHT EV8+ DG/LG A80 cod. 110.0456.119
GLAM-LIGHT EV8+ WG1C/WG3C A80 cod. 110.0456.142
GLAM-LIGHT EV8+ WH/T A80 cod. 110.0456.143

INTENSIVE SPEED · LED LIGHT · A+ ENERGY

FEATURES	PERFORMANCE					ACCESSORIES
Finish • White glass / Warm gray 3C • Dark grey glass / Light grey • Warm gray 1C glass / Warm gray 3C • White glass / Transparent	**Speed**	1	2	3	INT	**Cod. 112.0157.240** F8 Charcoal filter
Controls Touch control	**Air capacity IEC point**	310	420	580	720	**Cod. 112.0252.439** Recycling version kit WH
Lighting LED lights	**Pressure**	440	500	540	550	**Cod. 112.0252.442** Recycling version kit BK
Grease filter Cassettes dishwasher safe	**Input**	175	220	255	270	**Cod. 112.0158.127** FHP8 Charcoal filter High Performance
Ø of air outlet 150 / 120 mm	**Noise level**	52	56	62	65	**Cod. 112.0185.278** FLL8 Charcoal filter Long Lasting
Width 800 mm						
Energy class A+						

SMILE

CHIMNEY INCLUDED

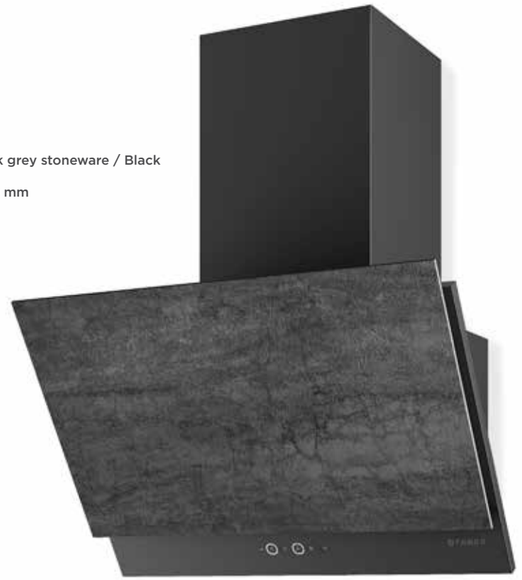

Dark grey stoneware / Black

600 mm

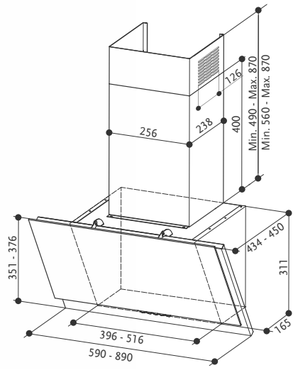

GRÈXIA

GRÈXIA GRES DG/BK A60 cod. 330.0543.464
GRÈXIA GRES DG/BK A90 cod. 330.0543.465

GRÈXIA GRES LG/X A60 cod. 330.0543.467
GRÈXIA GRES LG/X A90 cod. 330.0543.468

(optional)

FEATURES
Finish
• Dark grey stoneware / Black • Light grey stoneware / Stainless steel
Controls
Squarcle touch
Lighting
2 LED lights
Grease filter
Cassettes dishwasher safe
Ø of air outlet
150 / 120 mm
Width
600 / 900 mm
Energy class
C

PERFORMANCE				
Speed	1	2	3	INT
Air capacity IEC point	300	480	620	690
Pressure	340	430	470	480
Input	145	180	230	250
Noise level	53	64	69	72

ACCESSORIES
Cod. 112.0157.240
F8 Charcoal filter
Cod. 112.0158.127
FHP8 Charcoal filter High Performance
Cod. 112.0185.278
FLL8 Charcoal filter Long Lasting
Cod. 112.0615.733
Remote control

Light grey stoneware / Stainless steel

600 mm

Black glass / Stainless Steel
800 mm

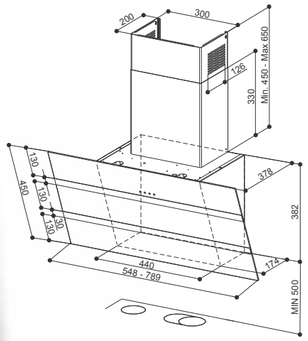

To be installed at a minimum distance from the hob of **50 cm.**

STEELMAX

STEELMAX EV8 LED BK/X A55 cod. 330.0538.524
STEELMAX EV8 LED BK/X A80 cod. 330.0538.526
STEELMAX EV8 LED WH/X A55 cod. 330.0538.525
STEELMAX EV8 LED WH/X A80 cod. 330.0538.523

EVO DIFFUSER · REMOTE BLOWER · INTENSIVE SPEED · LED LIGHT

(optional)

FEATURES	PERFORMANCES					ACCESSORIES
Finish	**Speed**	1	2	3	INT	**Cod. 112.0157.240**
• Black glass / Stainless Steel • White glass / Stainless Steel	**Air capacity IEC point**	320	490	640	730	F8 Charcoal filter
Controls	**Pressure**	340	450	480	520	**Cod. 112.0158.127**
Touch control	**Input**	145	180	230	250	Charcoal filter High Performance
Lighting	**Noise level**	53	63	68	71	**Cod. 112.0252.439**
2 LED lights						Recycling version kit WH
Grease filter						**Cod. 112.0252.442**
Cassettes dishwasher safe						Recycling version kit BK
Ø of air outlet						**Cod. 112.0185.278**
150 / 120 mm						FLL8 Charcoal filter Long Lasting
Width						
550 / 800 mm						
Energy class						
B						

Black glass / Stainless Steel
550 mm

White glass / Stainless Steel
550 mm

Black glass

CHIMNEY INCLUDED

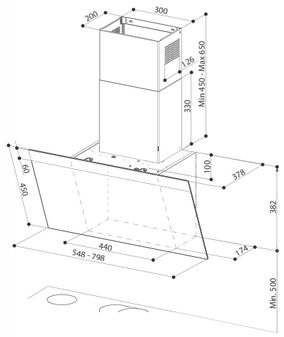

To be installed at a minimum distance from the hob of **50 cm.**

DAISY PLUS

DAISY + BK A55 cod. 330.0612.373
DAISY + BK A80 cod. 330.0612.374
DAISY + WH A55 cod. 330.0612.375
DAISY + WH A80 cod. 330.0612.371

REMOTE BLOWER · INTENSIVE SPEED · LED LIGHT

(optional)

A ENERGY

FEATURES	PERFORMANCE					ACCESSORIES
Finish	**Speed**	1	2	3	INT	**Cod. 112.0327.007**
• Black glass • White glass	**Air capacity IEC point**	310	420	580	720	ENERGY Remote blower kit
Controls	**Pressure**	440	500	540	550	**Cod. 112.0157.240**
Touch control	**Input**	175	220	255	270	F8 Charcoal filter
Lighting	**Noise level**	52	56	62	65	**Cod. 112.0327.632**
2 LED lights						Recycling version kit X
Grease filter						**Cod. 112.0158.127**
Cassettes dishwasher safe						FHP8 Charcoal filter High Performance
Ø of air outlet						**Cod. 112.0185.278**
150 / 120 mm						FLL8 Charcoal filter Long Lasting
Width						
550 / 800 mm						
Energy class						
A						

White glass
550 mm

Almond

CHIMNEY INCLUDED

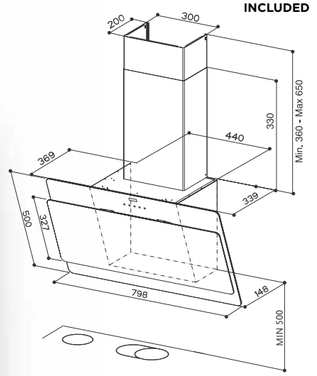

To be installed at a minimum distance from the hob of **50 cm.**

COCKTAIL

COCKTAIL BK EV8 A80 cod. 110.0252.427
COCKTAIL WH EV8 A80 cod. 110.0252.428
COCKTAIL ALMOND EV8 A80 cod. 110.0364.606

PERIMETER ASPIRATION · INTENSIVE SPEED · DELAY 30 · LED LIGHT

FEATURES	PERFORMANCE				ACCESSORIES
Finish • White glass • Black glass • Warm gray 3C	**Speed**	1	2	3	INT	**Cod. 112.0157.240** F8 Charcoal filter
Controls Touch control	**Air capacity IEC point**	310	480	630	720	**Cod. 112.0250.289** Chimney kit X
Lighting 2 LED lights	**Pressure**	350	450	480	520	**Cod. 112.0250.290** Chimney kit BK
Grease filter Cassettes dishwasher safe	**Input**	145	180	230	250	**Cod. 112.0158.127** FHP8 Charcoal filter High Performance
Ø of air outlet 150 / 120 mm	**Noise level**	52	62	67	70	**Cod. 112.0185.278** FLL8 Charcoal filter Long Lasting
Width 800 mm						
Energy class B						

White

Black

Black glass
800 mm

CHIMNEY INCLUDED

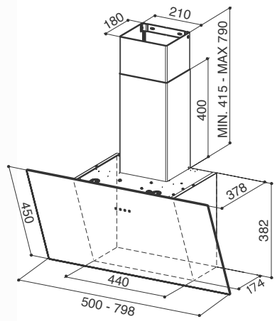

To be installed at a minimum distance from the hob of **50 cm.**

TWEET

TWEET EV8 LED BK A55 cod. 330.0529.664
TWEET EV8 LED WH A55 cod. 330.0529.665
TWEET EV8 LED BK A80 cod. 330.0529.666
TWEET EV8 LED WH A80 cod. 330.0529.667

INTENSIVE SPEED · LED LIGHT

CARATTERISTICHE	PRESTAZIONI					ACCESSORI
Finish • Black glass • White glass	**Speed**	1	2	3	INT	**Cod. 112.0157.240** F8 Charcoal filter
Controls Touch control	**Air capacity IEC point**	300	470	620	700	**Cod. 112.0158.127** FHP8 Charcoal filter High Performance
Lighting 2 LED lights	**Pressure**	340	440	480	500	**Cod. 112.0252.439** Recycling version kit WH
Grease filter Cassettes dishwasher safe	**Input**	145	180	230	250	**Cod. 112.0252.442** Recycling version kit BK
Ø of air outlet 150 / 120 mm	**Noise level**	53	63	68	71	**Cod. 112.0185.278** FLL8 Charcoal filter Long Lasting
Width 500 / 800 mm						
Energy class C						

White glass
800 mm

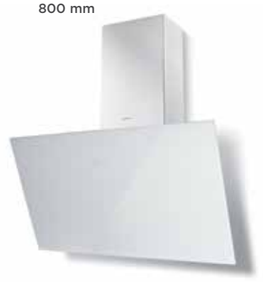

Black
500 mm

WALL

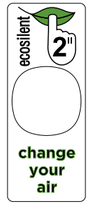

A++
52 DB(A) MAX CAPACITY

ECO FUNCTION:
change of air with minimum consumption and maximum silence.

AS SILENT AND PRECIOUS AS PURE AIR
Onyx-T is the quietest of all T-Shape hoods and guaranteed to amaze for its high performance and low noise. The hood's stylish design conceals FABER's exclusive SIL & STILL technology which allows functioning in ultra-silent mode at a sound level of less than 40 dB(A). Maximum comfort, minimum energy consumption and complete freedom to enjoy your home thanks to a continuous exchange of air signalled only by a green light in the Eco button. The Eco function even switches off automatically after 24 hours. What more can we say? Faber technology leaves you speechless!

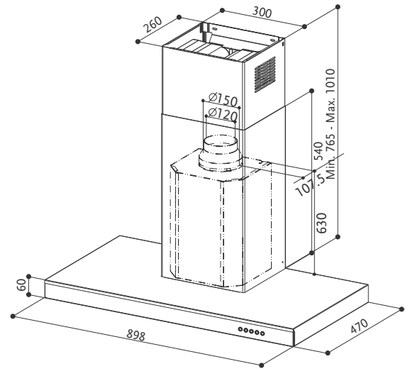

ONYX-T

ONYX-T X/V A90 cod. 325.0541.070

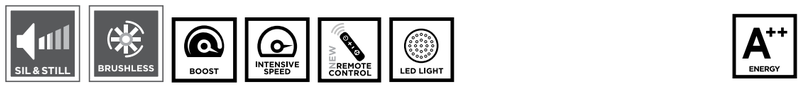

(optional)

FEATURES	
Finish	• Stainless steel / Black Glass
Controls	Squarcle touch
Lighting	LED light
Grease filter	Stainless steel cassettes dishwasher safe
Ø of air outlet	150 / 120 mm
Width	900 mm
Energy class	A++

PERFORMANCE					
Speed	1	2	3	INT	BOOST
Air capacity IEC point	240	300	380	550	750
Pressure	360	400	450	460	500
Input	55	60	70	100	170
Noise level	45	50	52	63	68

ACCESSORIES
Cod. 112.0157.243
F9 Charcoal filter
Cod. 112.0615.733
Remote control
Cod. 112.0185.276
FLL9 Charcoal filter Long Lasting
Cod. 112.0626.902
Kit recycling wall t-shape

WALL

WALL

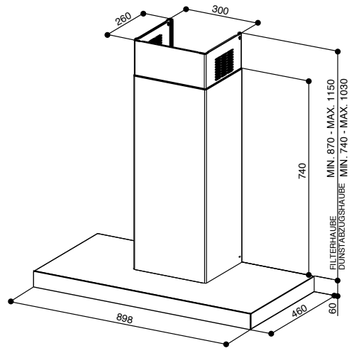

T-DARK

T-DARK A90 cod. 325.0584.868

REMOTE BLOWER (optional) · INTENSIVE SPEED · FILTER ALARM · NEW REMOTE CONTROL (optional) · LED LIGHT · A+ ENERGY

FEATURES	PERFORMANCE					ACCESSORIES
Finish	**Speed**	1	2	3	INT	**Cod. 112.0157.243**
• Black stainless steel	**Air capacity IEC point**	260	330	415	720	F9 Charcoal filter
Controls	**Pressure**	380	430	470	530	**Cod. 112.0615.733**
Touch control	**Input**	165	190	225	270	Remote control
Lighting	**Noise level**	53	57	61	72	**Cod. 112.0327.007**
LED lights						ENERGY Remote blower kit
Grease filter						**Cod. 112.0185.276**
Cassettes dishwasher safe						FLL9 Charcoal filter Long Lasting
Ø of air outlet						**Cod. 112.0626.902**
150 / 120 mm						Kit recycling wall t-shape
Width						
800 mm						
Energy class						
A+						

Stainless steel

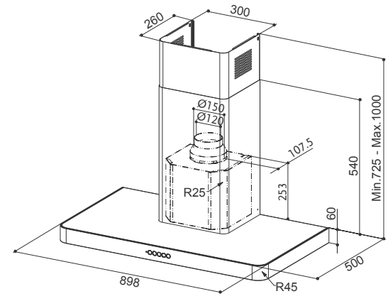

T-LIGHT

T-LIGHT EV8+ X A90 cod. 110.0456.267
T-LIGHT EV8+ WH MATT A90 cod. 110.0456.269

PERIMETER ASPIRATION · INTENSIVE SPEED · NEW REMOTE CONTROL (optional) · LED LIGHT · A ENERGY

FEATURES	PERFORMANCE					ACCESSORIES
Finish	**Speed**	1	2	3	INT	**Cod. 112.0157.243**
• Stainless steel • White matt	**Air capacity IEC point**	290	420	580	690	F9 Charcoal filter
Controls	**Pressure**	410	470	520	530	**Cod. 112.0615.733**
Squarcle touch	**Input**	190	230	255	270	Remote control
Lighting	**Noise level**	50	58	65	68	**Cod. 112.0185.276**
Perimeter LED light						FLL9 Charcoal filter Long Lasting
Grease filter						**Cod. 112.0626.902**
Cassettes dishwasher safe						Kit recycling wall t-shape
Ø of air outlet						
150 / 120 mm						
Width						
900 mm						
Energy class						
A						

White matt

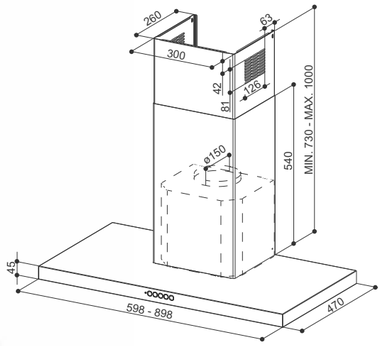

BELLA COMFORT

BELLA COMFORT X A60 cod. 325.0500.438
BELLA COMFORT X A90 cod. 325.0500.440

REMOTE BLOWER (optional) · INTENSIVE SPEED · REMOTE CONTROL (optional) · LED LIGHT

FEATURES	PERFORMANCE					ACCESSORIES
Finish	**Speed**	1	2	3	INT	**Cod. 112.0157.243**
• Stainless steel	**Air capacity IEC point**	300	460	620	700	F9 Charcoal filter
Controls	**Pressure**	330	430	490	500	**Cod. 112.0615.733**
Squarcle touch	**Input**	145	180	230	250	Remote control
Lighting	**Noise level**	52	62	69	71	**Cod. 112.0157.252**
2 LED lights						Upper chimmeny kit X
Grease filter						**Cod. 112.0327.007**
Cassettes dishwasher safe						ENERGY Remote blower kit
Ø of air outlet						**Cod. 112.0185.276**
150 / 120 mm						FLL9 Charcoal filter Long Lasting
Width						**Cod. 112.0626.902**
600 / 900 mm						Kit recycling wall T-Shape
Energy class						
B						

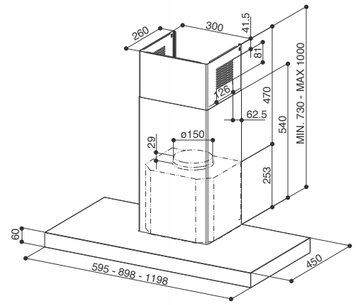

STILO GLASS SMART

STILO GLASS SMART X/V A60 cod. 325.0617.017
STILO GLASS SMART X/V A90 cod. 325.0617.016

HIGH FILTERING KIT (optional) · REMOTE BLOWER (optional) · INTENSIVE SPEED · DELAY 30 · LED LIGHT

FEATURES	PERFORMANCE					ACCESSORIES
Finish	**Speed**	1	2	3	INT	**Cod. 112.0157.243**
• Stainless steel / black glass	**Air capacity IEC point**	310	470	610	690	F9 Charcoal filter
Controls	**Pressure**	320	420	480	490	**Cod. 112.0615.733**
Touch control	**Input**	145	180	230	250	Remote control
Lighting	**Noise level**	54	63	69	72	**Cod. 112.0327.631**
2 LED lights						HFH Filter kit
Grease filter						**Cod. 112.0185.276**
Cassettes dishwasher safe						FLL9 Charcoal filter Long Lasting
Ø of air outlet						**Cod. 112.0626.902**
150 / 120 mm						Kit recycling wall T-Shape
Width						
600 / 900 mm						
Energy class						
B						

Black matt

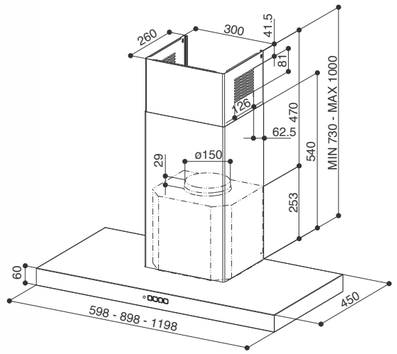

STILO COMFORT

STILO COMFORT X A60 cod. 325.0615.637
STILO COMFORT X A90 cod. 325.0615.636
STILO COMFORT X A120 cod. 325.0615.638
STILO COMFORT BK MATT A60 cod. 325.0618.791
STILO COMFORT BK MATT A90 cod. 325.0618.783
STILO COMFORT BK MATT A120 cod. 325.0618.787
STILO COMFORT WH MATT A60 cod. 325.0618.789
STILO COMFORT WH MATT A90 cod. 325.0618.740
STILO COMFORT WH MATT A120 cod. 325.0618.790

HIGH FILTERING · REMOTE BLOWER · INTENSIVE SPEED · LED LIGHT

KIT (optional) (optional)

FEATURES	PERFORMANCE					ACCESSORIES
Finish	**Speed**	1	2	3	INT	**Cod. 112.0157.243**
• Stainless steel • Black matt • White matt	**Air capacity IEC point**	310	470	610	690	F9 Charcoal filter
Controls	**Pressure**	320	420	480	490	**Cod. 112.0157.252**
Electronic	**Input**	145	180	230	250	Upper chimmeny kit X
Lighting	**Noise level**	54	63	69	72	**Cod. 112.0327.007**
2 LED lights						ENERGY Remote blower kit
Grease filter						**Cod. 112.0327.631**
Cassettes dishwasher safe						HFH Filter kit
Ø of air outlet						**Cod. 112.0185.276**
150 / 120 mm						FLL9 Charcoal filter Long Lasting
Width						**Cod. 112.0626.902**
600 / 900 / 1200 mm						Kit recycling wall T-Shape
Energy class						
B						

White matt

Stainless steel

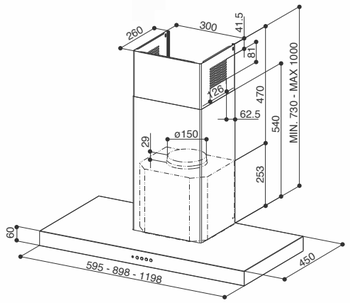

STILO SMART

STILO SMART X A60 cod. 325.0615.633
STILO SMART X A90 cod. 325.0615.635
STILO SMART X A120 cod. 325.0615.634

HIGH FILTERING · REMOTE BLOWER · LED LIGHT

KIT (optional) (optional)

FEATURES	PERFORMANCE				ACCESSORIES
Finish	**Speed**	1	2	3	**Cod. 112.0157.243**
• Stainless steel	**Air capacity IEC point**	230	320	435	F9 Charcoal filter
Controls	**Pressure**	150	190	210	**Cod. 112.0157.252**
Electronic	**Input**	85	95	115	Upper chimmeny kit X
Lighting	**Noise level**	54	61	68	**Cod. 112.0327.007**
2 LED lights					ENERGY Remote blower kit
Grease filter					**Cod. 112.0327.631**
Cassettes dishwasher safe					HFH Filter kit
Ø of air outlet					**Cod. 112.0185.276**
150 / 120 mm					FLL9 Charcoal filter Long Lasting
Width					**Cod. 112.0626.902**
600 / 900 / 1200 mm					Kit recycling wall T-Shape
Energy class					
D					

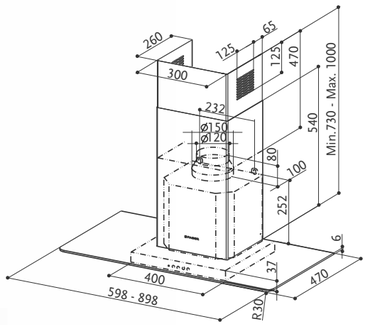

NICE

NICE LED SRM X/V NS A60 cod. 325.0617.052
NICE LED SRM X/V NS A90 cod. 325.0617.053

HIGH FILTERING · REMOTE BLOWER · LED LIGHT

KIT (optional) (optional)

FEATURES	PERFORMANCE				ACCESSORIES
Finish	**Speed**	1	2	3	**Cod. 112.0157.243**
• Stainless steel / Glass	**Air capacity IEC point**	220	300	420	F9 Charcoal filter
Controls	**Pressure**	150	190	210	**Cod. 112.0157.252**
Electronic	**Input**	85	95	115	Upper chimmeny kit X
Lighting	**Noise level**	54	62	68	**Cod. 112.0327.007**
2 LED lights					ENERGY Remote blower kit
Grease filter					**Cod. 112.0327.631**
Cassettes dishwasher safe					HFH Filter kit
Ø of air outlet					**Cod. 112.0185.276**
150 / 120 mm					FLL9 Charcoal filter Long Lasting
Width					**Cod. 112.0626.902**
600 / 900 mm					Kit recycling wall T-Shape
Energy class					
C					

The control interface, now even more user-friendly and functional, is an iconic signature of the unmistakable Faber style.

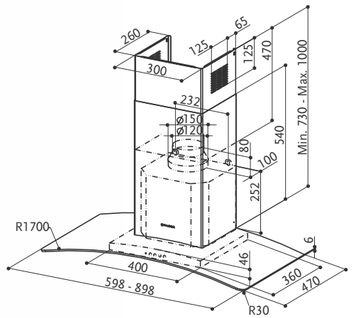

RAY

RAY SRM LED X/V NS A60 cod. 325.0617.020
RAY SRM LED X/V NS A90 cod. 325.0617.051

HIGH FILTERING · REMOTE BLOWER · LED LIGHT

KIT (optional) (optional)

FEATURES	PERFORMANCE				ACCESSORIES
Finish	**Speed**	1	2	3	**Cod. 112.0157.243**
• Stainless steel / Glass	**Air capacity IEC point**	220	300	420	F9 Charcoal filter
Controls	**Pressure**	150	190	210	**Cod. 112.0157.252**
Electronic	**Input**	85	95	115	Upper chimmeny kit X
Lighting	**Noise level**	54	62	68	**Cod. 112.0327.007**
2 LED lights					ENERGY Remote blower kit
Grease filter					**Cod. 112.0327.631**
Cassettes dishwasher safe					HFH Filter kit
Ø of air outlet					**Cod. 112.0185.276**
150 / 120 mm					FLL9 Charcoal filter Long Lasting
Width					**Cod. 112.0626.902**
600 / 900 mm					Kit recycling wall T-Shape
Energy class					
C					

The control interface, now even more user-friendly and functional, is an iconic signature of the unmistakable Faber style.

Bianco opaco
White matt

Bianco latte
White milk

Nero
Black

CHIMNEY INCLUDED

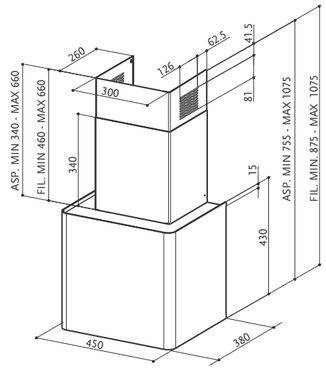

LITHOS

LITHOS EG6 LED BK A45 cod. 335.0533.563
LITHOS EG6 LED WH MATT A45 cod. 335.0533.564
LITHOS EG6 LED WH A45 cod. 335.0533.565

INTENSIVE SPEED
LED LIGHT

FEATURES	PERFORMANCE					ACCESSORIES
Finish • Black matt • White matt • White milk	**Speed**	1	2	3	INT	**Cod. 112.0157.240** F8 Charcoal filter
Controls Electronic	**Air capacity IEC point**	280	440	530	580	**Cod. 112.0158.127** FHP8 Charcoal filter High Performance
Lighting 2 LED lights	**Pressure**	200	280	300	320	**Cod. 112.0185.278** FLL8 Charcoal filter Long Lasting
Grease filter Cassettes dishwasher safe	**Input**	90	105	125	140	
Ø of air outlet 150 / 120 mm	**Noise level**	54	62	67	69	
Width 450 mm						
Energy class C						

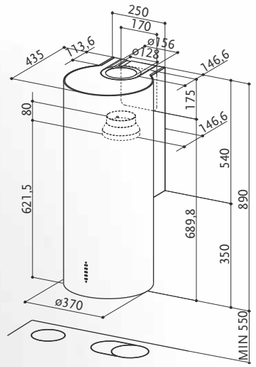

To be installed at a minimum distance from the hob of **55 cm.**

CYLINDRA

CYLINDRA EV8 X A37 cod. 110.0332.307

(optional) (optional)

FEATURES	PERFORMANCE					ACCESSORIES
Finish	**Speed**	1	2	3	INT	**Cod. 112.0157.243**
• Stainless steel	**Air capacity IEC point**	300	460	600	660	F9 Charcoal filter
Controls	**Pressure**	330	420	470	500	**Cod. 112.0615.733**
Electronic Led	**Input**	145	180	230	250	Remote control
Lighting	**Noise level**	52	60	67	70	**Cod. 112.0327.007**
2 LED lights						ENERGY Remote blower kit
Grease filter						**Cod. 112.0185.276**
Cassettes dishwasher safe						FLL9 Charcoal filter Long Lasting
Ø of air outlet						
150 / 120 mm						
Width						
370 mm						
Energy class						
C						

White gloss

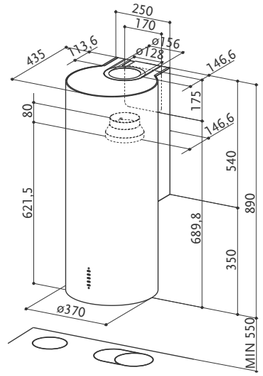

To be installed at a minimum distance from the hob of **55 cm.**

CYLINDRA GLOSS PLUS

CYLINDRA GLOSS PLUS EV8+ WH A37 cod. 335.0492.565
CYLINDRA PLUS BK MATT A37 cod. 335.0606.998

(optional) (optional)

FEATURES	PERFORMANCE					ACCESSORIES
Finish	**Speed**	1	2	3	INT	**Cod. 112.0157.243**
• White gloss • Black matt	**Air capacity IEC point**	280	420	580	680	F9 Charcoal filter
Controls	**Pressure**	430	500	530	545	**Cod. 112.0615.733**
Led Electronic	**Input**	190	230	255	270	Remote control
Lighting	**Noise level**	56	62	68	71	**Cod. 112.0327.007**
Micro LED Lights						ENERGY Remote blower kit
Grease filter						**Cod. 112.0185.276**
Cassettes dishwasher safe						FLL9 Charcoal filter Long Lasting
Ø of air outlet						
150 / 120 mm						
Width						
370 mm						
Energy class						
A						

Black matt

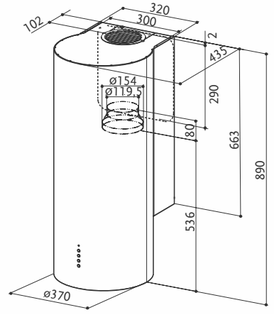

ECLIPSE

ECLIPSE EV8 LED X A37 cod. 335.0538.983

REMOTE BLOWER (optional) · REAR OUTLET · INTENSIVE SPEED · LED LIGHT

FEATURES	PERFORMANCE				ACCESSORIES
Finish	**Speed**	1	2	3	INT
• Stainless steel	**Air capacity IEC point**	280	410	500	540
Controls	**Pressure**	340	440	470	500
Electronic	**Input**	145	180	230	250
Lighting	**Noise level**	52	62	68	70
2 LED lights					
Grease filter					
Cassettes dishwasher safe					
Ø of air outlet					
150 / 120 mm					
Width					
370 mm					
Energy class					
C					

Cod. 112.0157.243
F9 Charcoal filter

Cod. 112.0327.007
ENERGY Remote blower kit

Cod. 112.0185.276
FLL9 Charcoal filter Long Lasting

White

Cubia

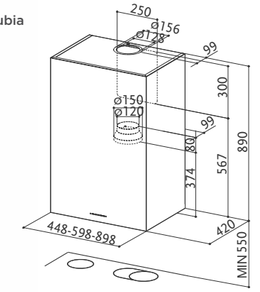

Cubia Gloss

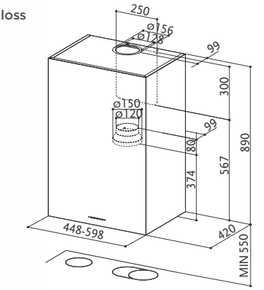

To be installed at a minimum distance from the hob of **55 cm.**

CUBIA PLUS
CUBIA GLOSS PLUS

CUBIA PLUS EV8 X A45 cod. 335.0502.080
CUBIA PLUS EV8 X A60 cod. 335.0502.091
CUBIA PLUS EV8 X A90 cod. 335.0502.092

CUBIA GLOSS PLUS EV8 WH A45 cod. 335.0502.094
CUBIA GLOSS PLUS EV8 WH A60 cod. 335.0502.095

PERIMETER ASPIRATION · REMOTE BLOWER (optional) · REAR OUTLET · INTENSIVE SPEED · 30 DELAY 0 · 24 HOUR 24 · FILTER ALARM · NEW REMOTE CONTROL (optional) · LED LIGHT

FEATURES	PERFORMANCE					ACCESSORIES
Finish	**Speed**	1	2	3	INT	**Cod. 112.0157.240**
• Stainless steel • White	**Air capacity IEC point**	300	470	600	670	F8 Charcoal filter
Controls	**Pressure**	350	440	490	500	**Cod. 112.0615.733**
Electronic EVO + Display	**Input**	145	180	230	250	Remote control
Lighting	**Noise level**	50	58	65	69	**Cod. 112.0327.007**
2 LED lights						ENERGY Remote blower kit
Grease filter						**Cod. 112.0158.127**
Cassettes dishwasher safe						FHP8 Charcoal filter High Performance
Ø of air outlet						**Cod. 112.0185.278**
150 / 120 mm						FLL8 Charcoal filter Long Lasting
Width						
450 / 600 900 (only s. steel)						
Energy class						
B						

Stainless steel

WALL

Old brass - OB

Rear air outlet kit (optional)

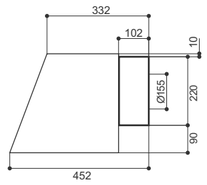

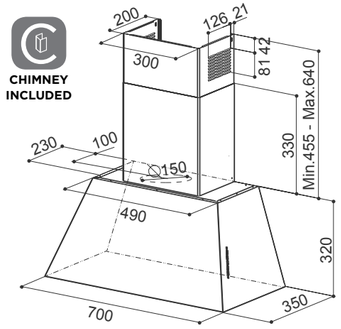

further specication in the accessory session on page 316

Old copper - OC

Cast iron - CI

Dark grey matt - DG MATT

Old metal - OM

Country grey matt - CG MATT

CHLOÈ

CHLOÈ EV8+ OM A70 cod. 110.0456.129
CHLOÈ EV8+ OC A70 cod. 110.0456.174
CHLOÈ EV8+ CI A70 cod. 110.0456.175

CHLOÈ EV8+ OB A70 cod. 110.0456.177
CHLOÈ EV8+ DG MATT A70 cod. 110.0458.989
CHLOÈ EV8+ CG MATT A70 cod. 110.0459.033

REMOTE BLOWER (optional) · REAR OUTLET · PERIMETER ASPIRATION · INTENSIVE SPEED · DELAY 30 · HOUR 24 · FILTER ALARM · NEW REMOTE CONTROL (optional) · LED LIGHT · ENERGY A

FEATURES

Finish
- Old metal
- Old copper
- Cast iron
- Old brass
- Dark grey matt
- Country grey matt

Controls
Electronic Led

Lighting
LED light

Grease filter
Cassettes dishwasher safe

Ø of air outlet
150 /120 mm

Width
700 mm

Energy class
A

PERFORMANCE

	1	2	3	INT
Speed				
Air capacity IEC point	300	420	590	700
Pressure	440	500	540	550
Input	190	230	255	270
Noise level	51	59	66	69

ACCESSORIES

Cod. 112.0157.240
F8 Charcoal filter

Cod. 112.0615.733
Remote control

Cod. 112.0327.007
ENERGY Remote blower kit

Cod. 112.0158.127
FHP8 Charcoal filter High Performance

Cod. 112.0185.278
FLL8 Charcoal filter Long Lasting

Cod. 112.0490.249
Rear air outlet kit OM

Cod. 112.0490.250
Rear air outlet kit OC

Cod. 112.0490.261
Rear air outlet kit CI

Cod. 112.0490.262
Rear air outlet kit OB

Cod. 112.0490.263
Rear air outlet kit DG MATT

Cod. 112.0490.264
Rear air outlet kit CG MATT

Cast iron - CI

Country grey matt - CG MATT

THE GREATNESS OF UNCONVENTIONAL DESIGN.
What would you rather do? Bask in the inspiring warmth of tradition, or experience thrilling new emotions every day? With Chloè XL you can do both. This hood combines exciting design with traditional character and takes high-tech performance and timeless elegance to a whole new level.

CHIMNEY INCLUDED

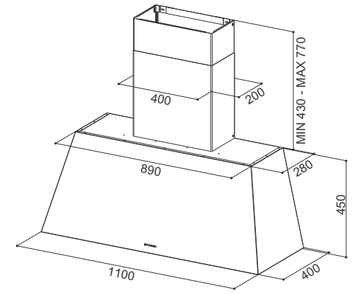

CHLOÈ XL

CHLOE' XL CG MATT A110 cod. 321.0506.535
CHLOE' XL CI A110 cod. 321.0506.536

REMOTE BLOWER (optional)
LED LIGHT

FEATURES	PERFORMANCE			ACCESSORIES
Finish • Country grey matt • Cast iron	**Speed**	1	2 3	**Cod. 112.0157.240** F8 Charcoal filter
Controls Electromechanical Knob	**Air capacity IEC point**	280	420 570	**Cod. 112.0158.127** FHP8 Charcoal filter High Performance
Lighting LED light	**Pressure**	200	260 320	**Cod. 112.0185.278** FLL8 Charcoal filter Long Lasting
Grease filter Cassettes dishwasher safe	**Input**	90	105 140	**Cod. 112.0327.007** ENERGY Remote blower kit
Ø of air outlet 150 /120 mm	**Noise level**	51	60 67	
Width 1100 mm				
Energy class C				

WALL

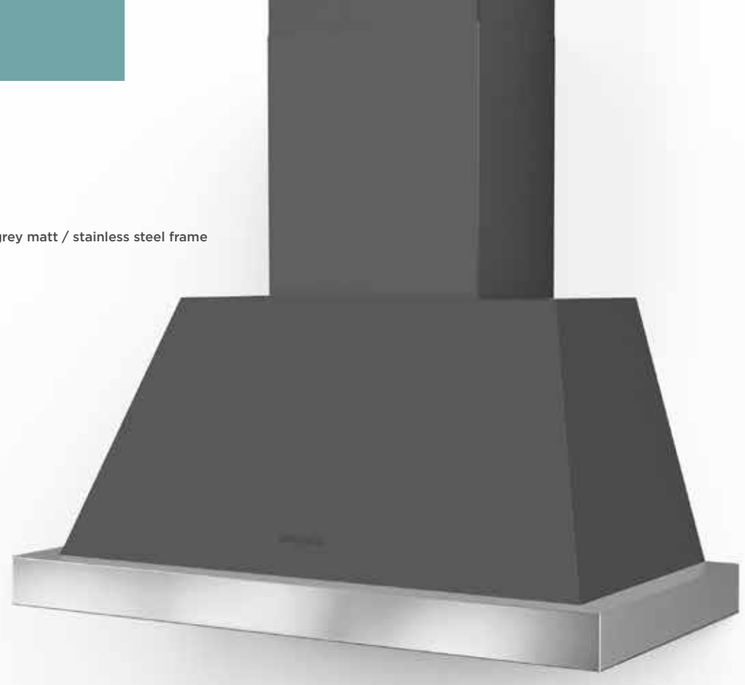

Dark grey matt / stainless steel frame

White matt / stainless steel frame

White matt / durmast wood frame

Dark grey matt / durmast wood frame

STYLE IN EVERY DETAIL, TECHNOLOGY IN EVERY BREATH.
Today, the world is one nation, the whole planet a global village. And the pleasure of country living has reached even the biggest metropolis. Today is the era of Thea. This is a hood that looks beyond the walls of your kitchen, opening up new horizons in design and redefining life in the home. But take nothing for granted! Despite its vintage soul, this hood packs the performance needed for today's industrial world.

CHIMNEY INCLUDED

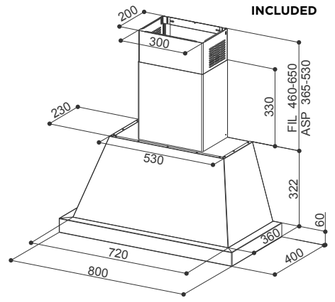

THEA

THEA EV8 WH MATT A80 SC cod. 321.0517.783
THEA EV8 DG MATT A80 SC cod. 321.0517.784

REMOTE BLOWER (optional) · INTENSIVE SPEED · LED LIGHT

FEATURES	PERFORMANCE				
Finish	**Speed**	1	2	3	INT
• White matt • Dark grey matt	**Air capacity IEC point**	320	480	640	750
Controls	**Pressure**	340	460	490	500
Electronic	**Input**	145	180	230	250
Lighting	**Noise level**	51	61	67	70
LED light					
Grease filter					
Cassettes dishwasher safe					
Ø of air outlet					
150 /120 mm					
Width					
800 mm					
Energy class					
C					

ACCESSORIES	FRAME FINISH
Cod. 112.0157.240	**Cod. 112.0516.433**
F8 Charcoal filter	Kit stainless steel frame Thea wall 800mm
Cod. 112.0327.007	
ENERGY Remote blower kit	**Cod. 112.0516.434**
Cod. 112.0158.127	Kit durmast frame Thea wall 800mm
FHP8 Charcoal filter High Performance	
Cod. 112.0185.278	
FLL8 Charcoal filter Long Lasting	
Cod. 112.0527.474	
Kit mensola rovere	

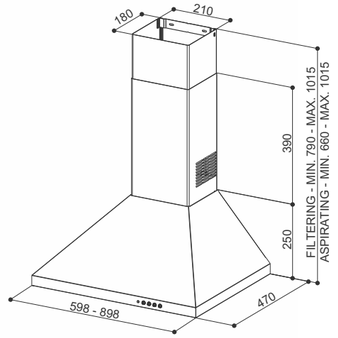

STRIP SMART EV8

STRIP SMART LED EV8 X A60 cod. 320.0533.680
STRIP SMART LED EV8 X A90 cod. 320.0533.761

ENERGY DIFFUSER · REMOTE BLOWER · LED LIGHT
(optional)

FEATURES	
Finish	• Stainless steel
Controls	Electronic
Lighting	2 LED lights
Grease filter	Cassettes dishwasher safe
Ø of air outlet	150 / 120 mm
Width	600 / 900 mm
Energy class	B

PERFORMANCE				
Speed	1	2	3	INT
Air capacity IEC point	320	500	650	740
Pressure	330	430	490	500
Input	145	180	230	250
Noise level	53	63	68	71

ACCESSORIES	
Cod. 112.0157.240	F8 Charcoal filter
Cod. 112.0157.271	Splashback X 900 mm
Cod. 112.0327.007	ENERGY Remote blower kit
Cod. 112.0158.127	FHP8 Charcoal filter High Performance
Cod. 112.0185.278	FLL8 Charcoal filter Long Lasting

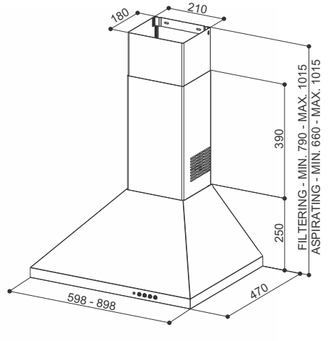

STRIP SMART PB

STRIP SMART PB X A60 cod. 110.0457.338
STRIP SMART PB X A90 cod. 110.0457.613
STRIP SMART PB BK A60 cod. 320.0536.583
STRIP SMART PB BK A90 cod. 320.0536.584
STRIP SMART PB W A60 cod. 320.0536.582
STRIP SMART PB W A90 cod. 320.0536.590

ENERGY DIFFUSER · REMOTE BLOWER · LED LIGHT
(optional)

FEATURES	
Finish	• Stainless steel
Controls	Electromechanical
Lighting	2 LED lights
Grease filter	Cassettes dishwasher safe
Ø of air outlet	150 / 120 mm
Width	600 / 900 mm
Energy class	D

PERFORMANCES			
Speed	1	2	3
Air capacity IEC point	240	290	380
Pressure	165	200	220
input	70	100	125
Noise level	53	57	64

ACCESSORIES	
Cod. 112.0157.240	F8 Charcoal filter
Cod. 112.0157.271	Splashback X 900 mm
Cod. 112.0327.007	ENERGY Remote blower kit
Cod. 112.0158.127	FHP8 Charcoal filter High Performance
Cod. 112.0185.278	FLL8 Charcoal filter Long Lasting

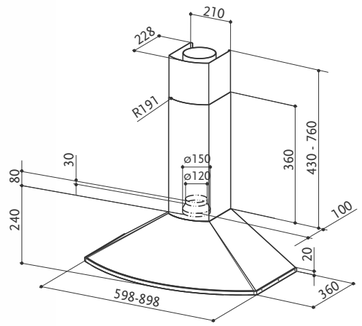

TENDER

TENDER X A60 cod. 110.0157.048
TENDER X A90 cod. 110.0157.049

REMOTE BLOWER
LED LIGHT
(optional)

FEATURES	PERFORMANCE				ACCESSORIES	
Finish	**Speed**	1	2	3	**Cod. 112.0157.240**	**Cod. 112.0157.272**
• Stainless steel	**Air capacity IEC point**	255	320	400	F8 Charcoal filter	Fondale X 1200 mm
Controls	**Pressure**	175	210	235	**Cod. 112.0157.262**	**Cod. 112.0327.007**
Electromechanical	**Input**	70	100	125	Upper chimmeny kit X	ENERGY Remote blower kit
Lighting	**Noise level**	55	62	68	**Cod. 112.0157.270**	**Cod. 112.0158.127**
2 LED lights					Fondale X 600 mm	FHP8 Charcoal filter High Performance
Grease filter					**Cod. 112.0157.271**	**Cod. 112.0185.278**
Cassettes dishwasher safe					Splashback X 900 mm	FLL8 Charcoal filter Long Lasting
Ø of air outlet						
150 / 120 mm						
Width						
600 / 900 mm						
Energy class						
D						

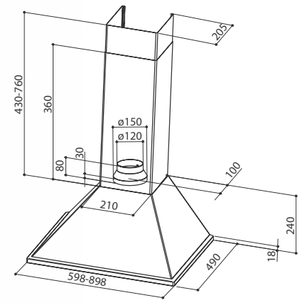

SYNTHESIS

SYNTHESIS X A60 cod. 110.0157.053
SYNTHESIS X A90 cod. 110.0157.054

REMOTE BLOWER
LED LIGHT
(optional)

FEATURES	PERFORMANCE				ACCESSORIES
Finish	**Speed**	1	2	3	**Cod. 112.0157.240**
• Stainless steel	**Air capacity IEC point**	255	320	400	F8 Charcoal filter
Controls	**Pressure**	175	210	235	**Cod. 112.0157.257**
Electromechanical push button	**Input**	70	100	125	Upper chimmeny kit X
Lighting	**Noise level**	55	62	68	**Cod. 112.0157.270**
2 LED lights					Fondale X 600 mm
Grease filter					**Cod. 112.0157.271**
Cassettes dishwasher safe					Splashback X 900 mm
Ø of air outlet					**Cod. 112.0327.007**
150 / 120 mm					ENERGY Remote blower kit
Width					**Cod. 112.0158.127**
600 / 900 mm					FHP8 Charcoal filter High Performance
Energy class					**Cod. 112.0185.278**
D					FLL8 Charcoal filter Long Lasting

White

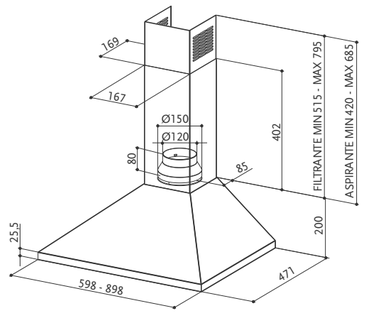

VALUE

VALUE PB X A60 cod. 320.0557.539
VALUE PB X A90 cod. 320.0557.540
VALUE PB W A60 cod. 320.0557.541
VALUE PB W A90 cod. 320.0557.542
VALUE PB BK A60 cod. 320.0557.543
VALUE PB BK A90 cod. 320.0557.544

LED LIGHT

Black

Stainless steel

FEATURES	PERFORMANCE				ACCESSORIES
Finish • Stainless steel • White • Black	**Speed**	1	2	3	**Cod. 112.0067.944** F3 Charcoal filter
Controls Electromechanical push button	**Air capacity IEC point**	255	330	430	**Cod. 112.0544.470** FLL3 Charcoal filter Long Lasting
Lighting 2 LED lights	**Pressure**	260	290	300	
Grease filter Cassettes dishwasher safe	**Input**	95	125	145	
Ø of air outlet 150 / 120 mm	**Noise level**	58	62	67	
Width 600 / 900 mm					
Energy class D					

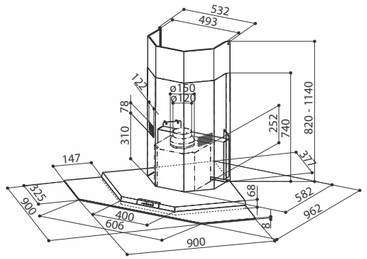

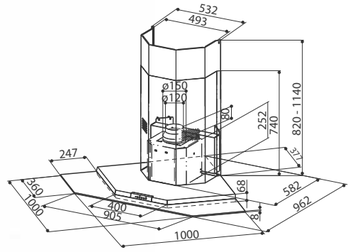

PREMIO ANGOLO/SP

PREMIO ANGOLO/SP EV8 LED X/V A90 cod. 325.0537.824
PREMIO ANGOLO/SP EV8 LED X/V A100 cod. 325.0537.825

REMOTE BLOWER (optional) · LED LIGHT

FEATURES	PERFORMANCE				ACCESSORIES
Finish	**Speed**	1	2	3	INT	**Cod. 112.0157.243**
• Stainless steel / Glass	**Air capacity IEC point**	300	480	620	700	F9 Charcoal filter
Controls	**Pressure**	330	430	480	500	**Cod. 112.0157.263**
Electronic	**Input**	145	180	230	250	Upper chimney kit X
Lighting	**Noise level**	54	64	69	71	**Cod. 112.0157.273**
4 LED lights						Splashback X
Grease filter						**Cod. 112.0157.284**
Cassettes dishwasher safe						Corner adapter kit
Ø of air outlet						**Cod. 112.0327.007**
150 / 120 mm						ENERGY Remote blower kit
Width						**Cod. 112.0185.276**
900x900 / 1000x1000 mm						FLL9 Charcoal filter Long Lasting
Energy class						
C						

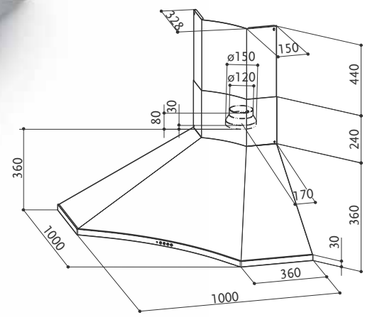

SOLARIS

SOLARIS EG6 LED X A100 cod. 320.0538.968

REMOTE BLOWER (optional) · LED LIGHT

FEATURES	PERFORMANCE				ACCESSORIES
Finish	**Speed**	1	2	3	**Cod. 112.0157.240**
• Stainless steel	**Air capacity IEC point**	300	440	570	F8 Charcoal filter
Controls	**Pressure**	220	280	320	**Cod. 112.0157.261**
Electromechanical	**Input**	90	105	140	Upper chimney kit X
Lighting	**Noise level**	57	64	71	**Cod. 112.0157.274**
4 LED lights					Splashback X
Grease filter					**Cod. 112.0327.007**
Cassettes dishwasher safe					ENERGY Remote blower kit
Ø of air outlet					**Cod. 112.0158.127**
150 / 120 mm					FHP8 Charcoal filter High Performance
Width					**Cod. 112.0185.278**
1000x1000 mm					FLL8 Cartuccia carbone attivo Long Lasting
Energy class					
D					

ISLAND

BELLA COMFORT ISOLA 243
CHLOÈ XL ISOLA 256
CORINTHIA ISOLA 248
CUBIA ISOLA PLUS 253
CUBIA ISOLA GLOSS PLUS 253
CYLINDRA ISOLA 252
CYLINDRA ISOLA GLOSS PLUS 251
GLASSY ISOLA 246
STILO COMFORT ISOLA 245
STILO GLASS SMART ISOLA 244
THEA ISOLA 258
T-SHELF 238
T-LIGHT ISOLA 242
TRATTO ISOLA 247

Perfect in their every detail, extremely powerful, ideal for all-round kitchen use. Island workstation kitchens take on a central role in the house and in daily family life: cooking instantly develops into personal flair, passion, choice, an intimate, private activity. Island decorative hoods are attractive from all viewpoints, with perfect form in all its features: there is no hidden side or corner not seen by the naked eye. Characterised by symmetry and uniformity, illuminating the centre of our family lives.

ELEGANT INDUSTRIAL STYLE
T-shelf is the iconic island hood with an elegant industrial style. With its trellis structure, exclusive smoked glass shelves and double LED bar with dimmer, this practical and smart solution contributes to complementing the kitchen environment.

CHIMNEY INCLUDED

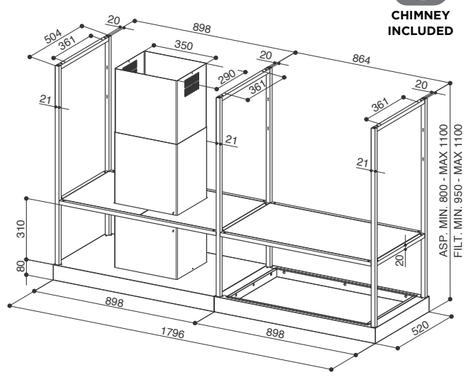

T-SHELF

T-SHELF EV8 BK MATT A180 cod. 325.0606.131
T-SHELF EV8 TITANIUM MATT A180 cod. 325.0617.018

INTENSIVE SPEED · LED LIGHT DIMMER · LED LIGHT

FEATURES	PERFORMANCE					ACCESSORIES
Finish	**Speed**	1	2	3	INT	**Cod. 112.0157.243**
• Black matt • Titanium matt	**Air capacity IEC point**	300	460	610	700	F9 Charcoal filter
Controls	**Pressure**	310	420	460	490	**Cod. 112.0185.276**
Rotative controls	**Input**	145	180	230	250	FLL9 Charcoal filter Long Lasting
Lighting	**Noise level**	59	66	69	70	
2 LED light bar						
Grease filter						
Cassettes dishwasher safe						
Ø of air outlet						
150 / 120 mm						
Width						
1800 mm						
Energy class						
C						

Black matt

Titanium matt

Acciaio inox
Stainless steel

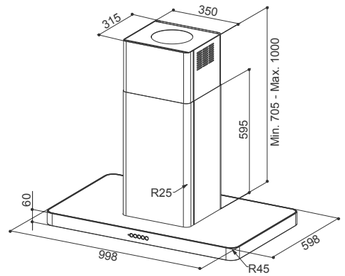

T-LIGHT ISOLA

T-LIGHT ISOLA EV8+ X A100 cod. 110.0456.264
T-LIGHT ISOLA EV8+ WH MATT A100 cod. 110.0456.265

PERIMETER ASPIRATION · INTENSIVE SPEED · NEW REMOTE CONTROL (optional) · LED LIGHT

ENERGY A

FEATURES	PERFORMANCE				ACCESSORIES
Finish	**Speed**	1	2	3	INT	**Cod. 112.0157.243**
• Stainless steel • White matt	**Air capacity IEC point**	290	420	580	690	F9 Charcoal filter
Controls	**Pressure**	410	470	520	530	**Cod. 112.0615.733**
Squarcle touch	**Input**	190	230	255	270	Remote control
Lighting	**Noise level**	50	58	65	68	**Cod. 112.0185.276**
Perimeter LED light						FLL9 Charcoal filter Long Lasting
Grease filter						**Cod. 112.0626.903**
Cassettes dishwasher safe						Kit Recycling Island T-Shape
Ø of air outlet						
150 / 120 mm						
Width						
1000 mm						
Energy class						
A						

Bianco opaco
White matt

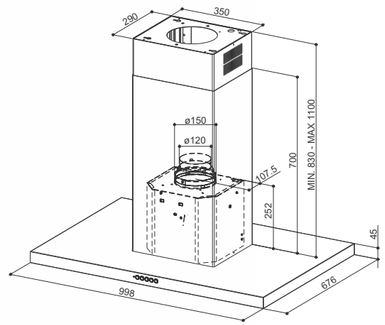

BELLA COMFORT ISOLA

BELLA COMFORT IS. X A100 cod. 325.0500.441

REMOTE BLOWER (optional) · INTENSIVE SPEED · NEW REMOTE CONTROL (optional) · LED LIGHT

FEATURES	PERFORMANCE					ACCESSORIES
Finish	**Speed**	1	2	3	INT	**Cod. 112.0157.243**
• Stainless steel	**Air capacity IEC point**	300	460	620	700	F9 Charcoal filter
Controls	**Pressure**	330	430	490	500	**Cod. 112.0157.354**
Squarcle touch	**Input**	145	180	230	250	Remote control
Lighting	**Noise level**	52	62	69	71	**Cod. 112.0157.268**
4 LED lights						Upper chimney kit X
Grease filter						**Cod. 112.0327.007**
Stainless steel cassettes dishwasher safe						ENERGY Remote blower kit
Ø of air outlet						**Cod. 112.0185.276**
150 / 120 mm						FLL9 Charcoal filter Long Lasting
Width						**Cod. 112.0626.903**
1000 mm						Kit Recycling Island T-Shape
Energy class						
B						

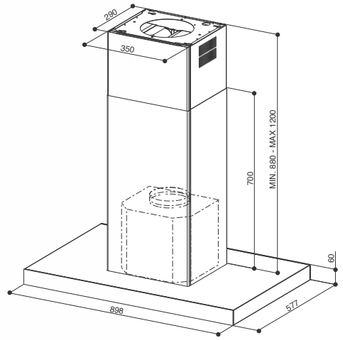

STILO GLASS SMART ISOLA

STILO GLASS SMART ISOLA A90 cod. 325.0618.802

HIGH FILTERING · REMOTE BLOWER · INTENSIVE SPEED · LED LIGHT

KIT (optional) (optional)

FEATURES	PERFORMANCE				ACCESSORIES
Finish	**Speed**	1	2	3	INT	**Cod. 112.0157.243**
• Stainless steel / Black glass	**Air capacity IEC point**	300	460	620	700	F9 Charcoal filter
Controls	**Pressure**	330	430	490	500	**Cod. 112.0157.252**
Touch control	**Input**	145	180	230	250	Upper chimmeny kit X
Lighting	**Noise level**	52	62	69	71	**Cod. 112.0327.007**
4 LED lights						ENERGY Remote blower kit
Grease filter						**Cod. 112.0327.631**
Cassettes dishwasher safe						HFH Filter kit
Ø of air outlet						**Cod. 112.0185.276**
150 / 120 mm						FLL9 Charcoal filter Long Lasting
Width						**Cod. 112.0626.903**
900 mm						Kit Recycling Island T-Shape
Energy class						
B						

Black matt

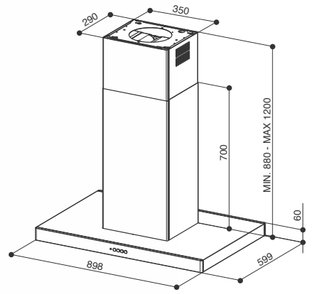

STILO COMFORT ISOLA

STILO COMFORT ISOLA X A90 cod. 325.0618.738
STILO COMFORT ISOLA WH MATT A90 cod. 325.0618.793
STILO COMFORT ISOLA BK MATT A90 cod. 325.0618.792

HIGH FILTERING · REMOTE BLOWER · INTENSIVE SPEED · LED LIGHT

KIT (optional) (optional)

FEATURES	PERFORMANCE				ACCESSORIES
Finish	**Speed**	1	2	3	INT	**Cod. 112.0157.243**
• Stainless steel • Black matt • White matt	**Air capacity IEC point**	300	460	620	700	F9 Charcoal filter
Controls	**Pressure**	330	430	490	500	**Cod. 112.0157.252**
Electronic	**Input**	145	180	230	250	Upper chimmeny kit X
Lighting	**Noise level**	52	62	69	71	**Cod. 112.0327.007**
4 LED lights						ENERGY Remote blower kit
Grease filter						**Cod. 112.0327.631**
Cassettes dishwasher safe						HFH Filter kit
Ø of air outlet						**Cod. 112.0185.276**
150 / 120 mm						FLL9 Charcoal filter Long Lasting
Width						**Cod. 112.0626.903**
900 mm						Kit Recycling Island T-Shape
Energy class						
B						

Stainless steel

White matt

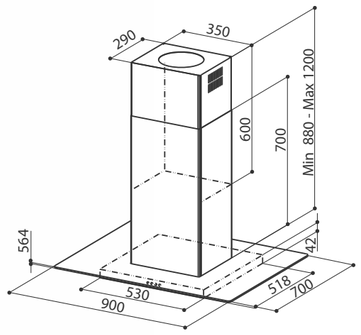

GLASSY ISOLA

GLASSY ISOLA/SP EV8 X/V NS A90 cod. 325.0617.019

REMOTE BLOWER · INTENSIVE SPEED · LED LIGHT

(optional)

FEATURES	PERFORMANCE					ACCESSORIES
Finish	**Speed**	1	2	3	INT	**Cod. 112.0157.243**
• Stainless steel / Glass	**Air capacity IEC point**	300	480	620	700	F9 Charcoal filter
Controls	**Pressure**	330	430	480	500	**Cod. 112.0157.288**
Electronic	**Input**	145	180	230	250	1 Baffle filter kit (order 2 kits)
Lighting	**Noise level**	54	64	69	71	**Cod. 112.0327.007**
4 LED lights						ENERGY Remote blower kit
Grease filter						**Cod. 112.0185.276**
Cassettes dishwasher safe						FLL9 Charcoal filter Long Lasting
Ø of air outlet						**Cod. 112.0626.903**
150 / 120 mm						Kit Recycling Island T-Shape
Width						
900 mm						
Energy class						
B						

The control interface, now even more user-friendly and functional, is an iconic signature of the unmistakable Faber style.

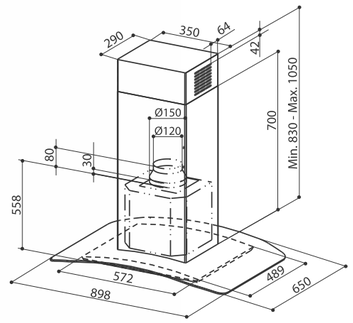

TRATTO ISOLA

TRATTO ISOLA/SP EV8 X/V NS A90 cod. 325.0628.236

EVO DIFFUSER · REMOTE BLOWER · INTENSIVE SPEED · LED LIGHT

(optional)

FEATURES	PERFORMANCE					ACCESSORIES
Finish	**Speed**	1	2	3	INT	**Cod. 112.0157.243**
• Stainless steel / Glass	**Air capacity IEC point**	300	480	620	700	F9 Charcoal filter
Controls	**Pressure**	330	430	480	500	**Cod. 112.0157.268**
Electronic	**Input**	145	180	230	250	Upper chimney kit X
Lighting	**Noise level**	54	64	69	71	**Cod. 112.0157.288**
4 LED lights						1 Baffle filter kit (order 2 kits)
Grease filter						**Cod. 112.0327.007**
Cassettes dishwasher safe						ENERGY Remote blower kit
Ø of air outlet						**Cod. 112.0185.276**
150 / 120 mm						FLL9 Charcoal filter Long Lasting
Width						
900 mm						
Energy class						
B						

ISLAND

DG MATT/CONCRETE
Dark grey matt/Concrete

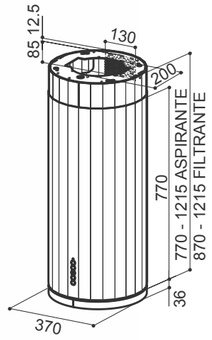

White gloss

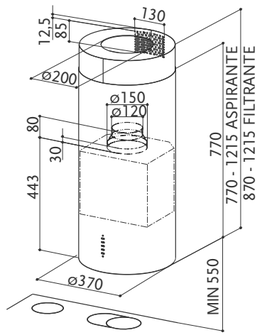

To be installed at a minimum distance from the hob of **55 cm.**

CORINTHIA ISOLA

CORINTHIA ISOLA EV8+ WH MATT/TS A37 cod. 110.0456.219
CORINTHIA ISOLA EV8+ DG MATT/CONCRETE A37 cod. 110.0456.220
CORINTHIA ISOLA EV8+ X/OM A37 cod. 110.0456.261

PERIMETER ASPIRATION · INTENSIVE SPEED · NEW REMOTE CONTROL · LED LIGHT

(optional)

ENERGY A

FEATURES	PERFORMANCE				ACCESSORIES
Finish	**Speed**	1	2	3	INT	**Cod. 112.0157.243**
• White matt / Tibetan silver • Dark grey matt / Concrete • Stainless steel / Old metal	**Air capacity IEC point**	280	420	580	680	F9 Charcoal filter
Controls	**Pressure**	430	500	530	545	**Cod. 112.0615.733**
Squarcle touch	**Input**	190	230	255	270	Remote control
Lighting	**Noise level**	56	62	68	71	**Cod. 112.0185.276**
Micro LED lights						FLL9 Charcoal filter Long Lasting
Grease filter						
Cassettes dishwasher safe						
Ø of air outlet						
150 / 120 mm						
Width						
370 mm						
Energy class						
A						

WH MATT/TS
White matt/Tibetan silver

X/OM
Stainless steel/Old metal

CYLINDRA ISOLA GLOSS PLUS

CYLINDRA ISOLA GLOSS PLUS EV8+ WH A37 cod. 335.0492.563
CYLINDRA ISOLA EVO PLUS BK MATT A37 cod. 335.0572.104

REMOTE BLOWER · PERIMETER ASPIRATION · INTENSIVE SPEED · FILTER ALARM · NEW REMOTE CONTROL · LED LIGHT

(optional) (optional)

ENERGY A

FEATURES	PERFORMANCE					ACCESSORIES
Finish	**Speed**	1	2	3	INT	**Cod. 112.0157.243**
• White gloss	**Air capacity IEC point**	280	420	580	680	F9 Charcoal filter
Controls	**Pressure**	430	500	530	545	**Cod. 112.0615.733**
Electronic Led	**Input**	190	230	255	270	Remote control
Lighting	**Noise level**	56	62	68	71	**Cod. 112.0327.007**
Micro LED Lights						ENERGY Remote blower kit
Grease filter						**Cod. 112.0286.014**
Cassettes dishwasher safe						Upper chimney kit WH H990
Ø of air outlet						**Cod. 112.0185.276**
150 / 120 mm						FLL9 Charcoal filter Long Lasting
Width						
370 mm						
Energy class						
A						

Black matt

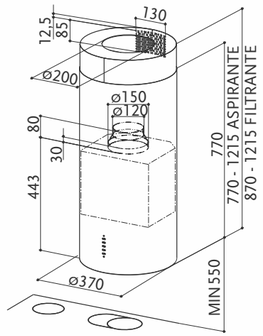

To be installed at a minimum distance from the hob of **55 cm.**

CYLINDRA ISOLA

CYLINDRA ISOLA EV8 X A37 ELN cod. 110.0332.308

REMOTE BLOWER (optional) · PERIMETER ASPIRATION · INTENSIVE SPEED · FILTER ALARM · NEW REMOTE CONTROL (optional) · LED LIGHT

FEATURES	PERFORMANCE				ACCESSORIES
Finish	**Speed**	1	2	3	INT	**Cod. 112.0157.243**
• Stainless steel	**Air capacity IEC point**	300	460	590	650	F9 Charcoal filter
Controls	**Pressure**	350	450	480	490	**Cod. 112.0615.733**
Electronic Led	**Input**	145	180	230	250	Remote control
Lighting	**Noise level**	56	62	68	71	**Cod. 112.0327.007**
2 LED lights						ENERGY Remote blower kit
Grease filter						**Cod. 112.0157.267**
Cassettes dishwasher safe						Upper chimney kit X
Ø of air outlet						**Cod. 112.0185.276**
150 / 120 mm						FLL9 Charcoal filter Long Lasting
Width						
370 mm						
Energy class						
C						

Stainless steel

Cubia Isola

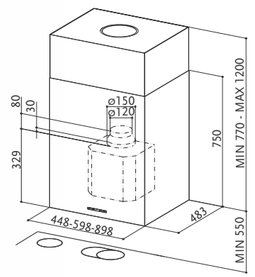

Cubia Isola Gloss

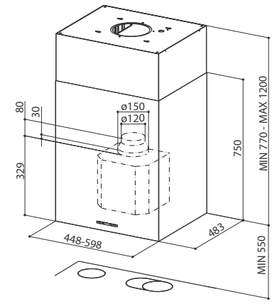

To be installed at a minimum distance from the hob of **55 cm.**

CUBIA ISOLA PLUS
CUBIA ISOLA GLOSS PLUS

CUBIA ISOLA PLUS EV8 X A45 cod. 335.0502.096
CUBIA ISOLA PLUS EV8 X A60 cod. 335.0502.097
CUBIA ISOLA PLUS EV8 X A90 cod. 335.0502.098
CUBIA ISOLA GLOSS PLUS EV8 WH A45 cod. 335.0502.099
CUBIA ISOLA GLOSS PLUS EV8 WH A60 cod. 335.0502.100

PERIMETER ASPIRATION · REMOTE BLOWER (optional) · INTENSIVE SPEED · DELAY 30 · HOUR 24 · FILTER ALARM · NEW REMOTE CONTROL (optional) · LED LIGHT

FEATURES	PERFORMANCE					ACCESSORIES
Finish	**Speed**	1	2	3	INT	**Cod. 112.0157.243**
• Stainless steel • White gloss	**Air capacity IEC point**	300	470	610	670	F9 Charcoal filter
Controls	**Pressure**	340	430	490	500	**Cod. 112.0615.733**
Electronic EVO + Display	**Input**	145	180	230	250	Remote control
Lighting	**Noise level**	53	60	67	70	**Cod. 112.0327.007**
4 LED lights						ENERGY Remote blower kit
Grease filter						**Cod. 112.0185.276**
Cassettes dishwasher safe						FLL9 Charcoal filter Long Lasting
Ø of air outlet						
150 / 120 mm						
Width						
450 / 600 mm						
Energy class						
C						

White gloss

THINGS WILL GE
LYONS
ROOT BEER

Country grey matt - CG MATT

UNIQUE PERSONALITY EXPRESSED IN PERFORMANCE.
Some ideas cast new light on everything around them: even colours, flavours and everyday gestures. In a dull, uniform world they epitomise newness, inspire beauty and establish a new sense of proportion. Chloè XL Isola is one of these ideas. Designed to take style to a higher level, Chloè XL Isola adds the excitement of broader horizons and new dimensions to your kitchen.

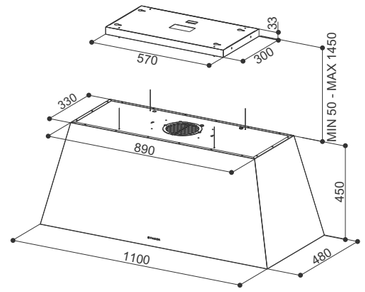

CHLOÈ XL ISOLA

CHLOE' XL ISOLA CG MATT F110 cod. 321.0506.537
CHLOE' XL ISOLA CI F110 cod. 321.0506.538

Cast iron - CI

* Ducted installation

LED LIGHT

FEATURES	PERFORMANCE				ACCESSORIES
Finish	**Speed**	1	2	3	**Cod. 112.0516.426***
• Country grey matt • Cast iron	**Air capacity IEC point**	280	420	570	Chimney kit island Cast iron
Controls	**Pressure**	200	260	320	**Cod. 112.0516.427***
Electromechanical Knob	**Input**	90	105	140	Chimney kit island Country grey matt
Lighting	**Noise level**	51	60	67	**Cod. 112.0158.127**
2 LED lights					FHP8 Charcoal filter High Performance
Grease filter					**Cod. 112.0185.278**
Cassettes dishwasher safe					FLL8 Charcoal filter Long Lasting
Ø of air outlet					
150 /120 mm					
Width					
1100 mm					
Energy class					
C					

*Needed for ducted installation

Dark grey matt / stainless steel frame

Dark grey matt / durmast wood frame

* Ducted installation

White matt / stainless steel frame

White matt / durmast wood frame

TIMELESS STYLE MEETS INNOVATIVE TECHNOLOGY.
New Country Isola places the range at the centre of your world. At last you can play the lead in a great show, with the whole kitchen as your stage. With its modern beauty and classic style, Thea Isola brings the extraordinary into your daily life. Thanks to a deep love of nature, this hood is at home in all environments. Amazingly versatile, Thea Isola delivers superb performance in any kitchen.

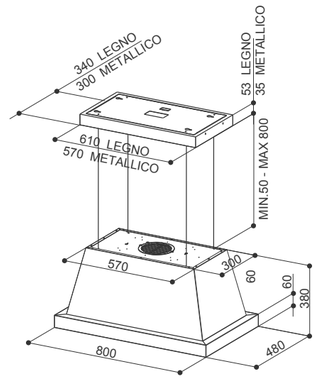

THEA ISOLA

THEA ISOLA EV8 WH MATT F80 SC cod. 321.0517.781
THEA ISOLA EV8 DG MATT F80 SC cod. 321.0517.782

INTENSIVE SPEED
LED LIGHT

FEATURES	PERFORMANCE				
Finish • White matt • Dark grey matt	**Speed**	1	2	3	INT
Controls Electronic	**Air capacity IEC point**	320	480	640	750
Lighting 2 LED lights	**Pressure**	340	460	490	500
Grease filter Cassettes dishwasher safe	**Input**	145	180	230	250
Ø of air outlet 150 /120 mm	**Noise level**	51	61	67	70
Width 800 mm					
Energy class C					

ACCESSORIES

Cod. 112.0516.428*
Chimney kit island White matt

Cod. 112.0516.430*
Chimney kit island Dark grey matt

Cod. 112.0158.127
FHP8 Charcoal filter High Performance

Cod. 112.0185.278
FLL8 Charcoal filter Long Lasting

*Needed for ducted installation

FRAME FINISH

Cod. 112.0516.431
Kit stainless steel frame Thea Isola 800mm

Cod. 112.0516.432
Kit durmast frame Thea Isola 800mm

ISLAND

Discreet, rational, silent.
Built-in hoods reduce the aesthetic impact of the hood in the kitchen and integrate perfectly with the cupboards.
An essential tool that's invisible to the eye.

BUILT-IN
BUILT UNDER
TELESCOPIC

WITH ANTICONDENSATION:

ILMA	266
ILMA TOUCH	262
HAVA	267
IN-NOVA ZERO DRIP	268

BUILT-IN:

IN-LIGHT	276
IN-NOVA AIR	271
IN-NOVA COMFORT	274
IN-NOVA PREMIUM	273
IN-NOVA SMART	275
IN-NOVA TOUCH	272
INCA LUX 2.0	279
INCA LUX GLASS	278
INCA LUX SMART	280
INKA PLUS HC	283
INKA PLUS HCS	282
INKA SMART C	286
INKA SMART HC	285
INKA SMART HCS (ICH)	284

TELESCOPIC:

FLEXA	293
FLEXA HIP	292
FLEXA GLASS	291
FLEXA GLASS LUX	290
MAXIMA EV8	288
MAXIMA ECO	289
MAXIMA TOUCH	287

BUILT UNDER:

106/35 PLUS	298
741 BASE	297
741 PB	296
2740 BASE	295
2740 PB	294

BUILT-IN
BUILT UNDER
TELESCOPIC

BUILT-IN
BUILT UNDER
TELESCOPIC

EXCLUSIVE,
CONDENSATION-FREE COMFORT
With Steam Off System, the exclusive Faber technology, in addition to the suction phase, the hood also emits air jets that create a vortical motion and acceleration and help to convey and capture the steam.
This puts an end to condensation and its depositing under and around the hood.
DOUBLE AIR ACTION TO COMPLETELY ELIMINATE CONDENSATION.

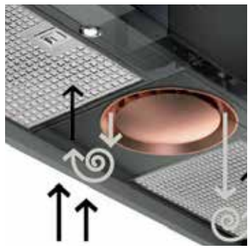

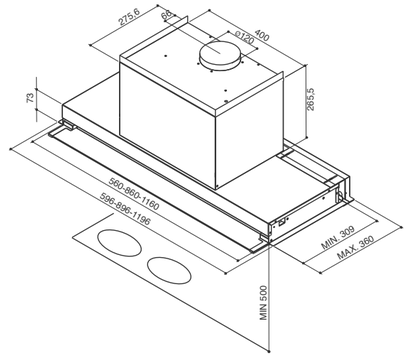

To be installed at a minimum distance from the hob of **50 cm.**

ILMA TOUCH

ILMA TOUCH X A60 cod. 305.0567.012
ILMA TOUCH X A90 cod. 305.0567.013
ILMA TOUCH X A120 cod. 305.0567.014

STEAM OFF SYSTEM · INTENSIVE SPEED · LED LIGHT · A ENERGY

INNOVATIVE TOUCH CONTROLS
Faber's touch controls are located at the front of the hood for instant access. These innovative front-edge controls make hood superbly easy to operate.

FEATURES	PERFORMANCE					ACCESSORIES
Finish	**Speed**	1	2	3	INT	**Cod. 112.0506.172**
• Stainless steel / white glass	**Air capacity IEC point**	195	270	378	455	F21 Charcoal filter
Controls	**Pressure**	240	250	260	270	
Squarcle touch	**Input**	100	115	200	220	
Lighting	**Noise level**	42	52	54	60	
2 LED lights						
Grease filter						
Cassettes dishwasher safe						
Ø of air outlet						
120 mm						
Width						
600 / 900 / 1200 mm						
Energy class						
A						

BUILT-IN
BUILT UNDER
TELESCOPIC

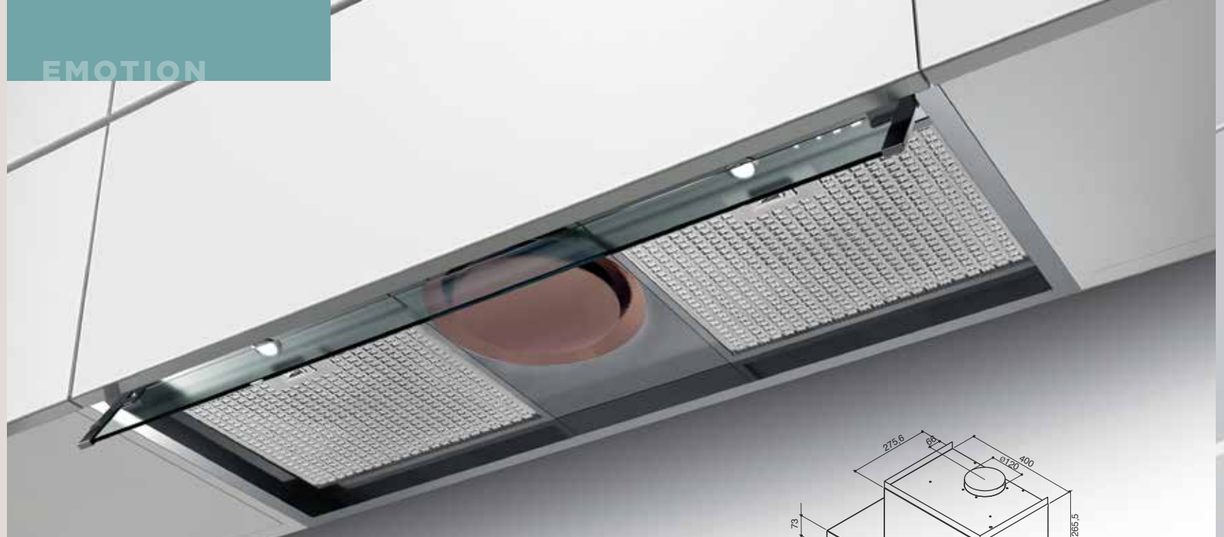

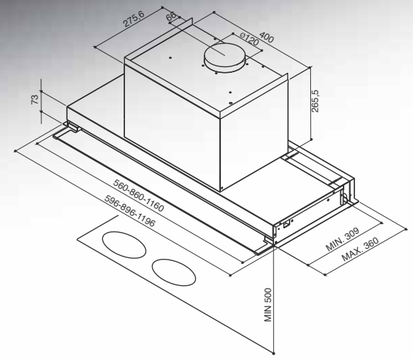

To be installed at a minimum distance from the hob of **50 cm.**

ILMA

ILMA X A60 cod. 305.0482.953
ILMA X A90 cod. 110.0456.294
ILMA X A120 cod. 305.0482.954

STEAM OFF SYSTEM · INTENSIVE SPEED · NEW REMOTE CONTROL (optional) · LED LIGHT · A ENERGY

FEATURES	PERFORMANCE					ACCESSORIES
Finish	**Speed**	1	2	3	INT	**Cod. 112.0506.172**
• Stainless steel	**Air capacity IEC point**	195	270	378	455	F21 Charcoal filter
Controls	**Pressure**	240	250	260	270	**Cod. 112.0615.733**
Squarcle touch	**Input**	100	115	200	220	Remote control
Lighting	**Noise level**	42	52	54	60	
LED lights						
Grease filter						
Stainless steel cassettes dishwasher safe						
Ø of air outlet						
120 mm						
Width						
600 / 900 / 1200 mm						
Energy class						
A						

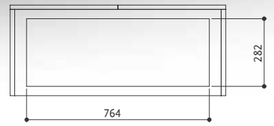

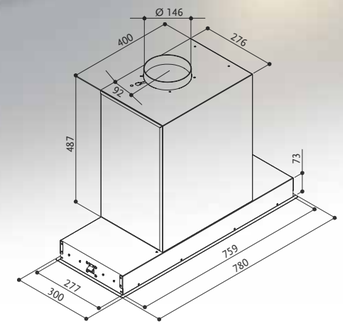

To be installed at a minimum distance from the hob of **50 cm.**

HAVA

HAVA X 78 cod. 325.0570.133

STEAM OFF SYSTEM · INTENSIVE SPEED · NEW REMOTE CONTROL (optional) · LED LIGHT · A ENERGY

FEATURES	PERFORMANCE					ACCESSORIES
Finish	**Speed**	1	2	3	INT	**Cod. 112.0576.982**
• Stainless steel	**Air capacity IEC point**	336	453	613	738	Filter kit
Controls	**Pressure**	428	473	506	526	**Cod. 112.0576.981**
Squarcle touch	**Input**	172	212	247	251	F25 Filter kit
Lighting	**Noise level**	47	55	57	66	**Cod. 112.0615.733**
2 LED lights						Remote control
Grease filter						
Cassettes dishwasher safe						
Ø of air outlet						
150 / 120						
Width						
780 mm						
Energy class						
A						

BUILT-IN
BUILT UNDER
TELESCOPIC

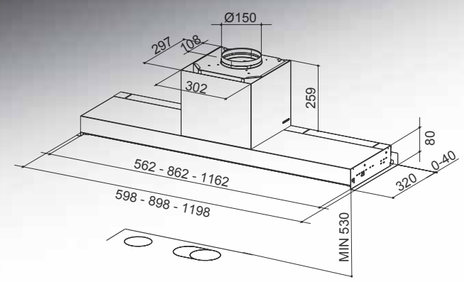

IN-NOVA ZERO DRIP

IN-NOVA ZERO DRIP A60 cod. 305.0626.490
IN-NOVA ZERO DRIP A90 cod. 305.0626.489
IN-NOVA ZERO DRIP A120 cod. 305.0626.531

ZERO DRIP · INTENSIVE SPEED · FILTER ALARM · NEW REMOTE CONTROL · LED LIGHT (optional) · A ENERGY

BUILT-IN
BUILT UNDER
TELESCOPIC

FEATURES	PERFORMANCE					ACCESSORIES
Finish	**Speed**	1	2	3	INT	**Cod. 112.0627.248**
• Stainless steel / White Glass visor	**Air capacity IEC point**	310	430	580	690	F26 Charcoal filter
Controls	**Pressure**	420	480	520	540	**Cod. 112.0615.733**
Squarcle touch	**Input**	195	235	260	270	Remote control
Lighting	**Noise level**	52	61	67	69	
2 LED lights						
Grease filter						
Cassettes dishwasher safe						
Ø of air outlet						
150 / 120 mm						
Width						
600 / 900 / 1200 mm						
Energy class						
A						

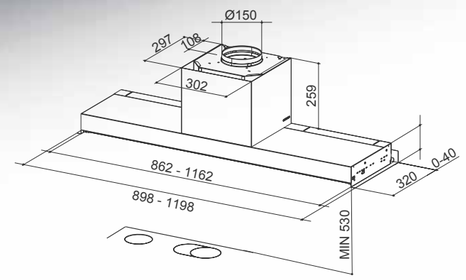

IN-NOVA AIR

IN-NOVA AIR X KL A90 cod. 305.0615.688
IN-NOVA AIR X KL A120 cod. 305.0615.701

FABER CLOUD · AIR QUALITY SENSOR · K-LINK · REMOTE BLOWER · PERIMETER ASPIRATION · INTENSIVE SPEED · FILTER ALARM · NEW REMOTE CONTROL · LED LIGHT (optional) · A ENERGY

BUILT-IN
BUILT UNDER
TELESCOPIC

FEATURES	PERFORMANCE					ACCESSORIES
Finish	**Speed**	1	2	3	INT	**Cod. 112.0157.243**
• Stainless steel / Black Glass visor	**Air capacity IEC point**	280	420	570	670	F9 Charcoal filter
Controls	**Pressure**	420	465	510	520	**Cod. 112.0615.733**
Squarcle touch	**Input**	175	220	255	270	Remote control
Lighting	**Noise level**	53	62	68	70	**Cod. 112.0327.007**
2 LED lights						ENERGY Remote blower kit
Grease filter						**Cod. 112.0185.276**
Cassettes dishwasher safe						FLL9 Charcoal filter Long Lasting
Ø of air outlet						
150 / 120 mm						
Width						
900 / 1200 mm						
Energy class						
A						

To be installed at a minimum distance from the hob of **53 cm.**

IN-NOVA TOUCH

IN-NOVA TOUCH X/BK A60 cod. 305.0611.152
IN-NOVA TOUCH X/BK A90 cod. 305.0611.153
IN-NOVA TOUCH X/BK A120 cod. 305.0611.154

IN-NOVA TOUCH X/WH A60 cod. 305.0611.157
IN-NOVA TOUCH X/WH A90 cod. 305.0611.156
IN-NOVA TOUCH X/WH A120 cod. 305.0611.155

REMOTE BLOWER (optional) · PERIMETER ASPIRATION · INTENSIVE SPEED · FILTER ALARM · NEW REMOTE CONTROL (optional) · LED LIGHT · A ENERGY

FEATURES	PERFORMANCE					ACCESSORIES	
Finish	**Speed**	1	2	3	INT	**Cod. 112.0157.243**	**Cod. 112.0624.485**
• Stainless steel / Black Glass visor • Stainless steel / White Glass visor	**Air capacity IEC point**	280	420	570	670	F9 Charcoal filter	Kit filters stainless steel In-Nova 60
Controls	**Pressure**	420	465	510	520	**Cod. 112.0615.733**	**Cod. 122.0624.486**
Squarcle touch	**Input**	175	220	255	270	Remote control	Kit filters stainless steel In-Nova 90
Lighting	**Noise level**	53	62	68	70	**Cod. 112.0327.007**	**Cod. 112.0624.487**
2 LED lights						ENERGY Remote blower kit	Kit filters stainless steel In-Nova 120
Grease filter						**Cod. 112.0185.276**	
Cassettes dishwasher safe						FLL9 Charcoal filter Long Lasting	
Ø of air outlet							
150 / 120 mm							
Width							
600 / 900 / 1200 mm							
Energy class							
A							

Faber's touch controls are located at the front of the hood for instant access.

To be installed at a minimum distance from the hob of **53 cm.**

IN-NOVA PREMIUM

IN-NOVA PREMIUM WH M A60 cod. 305.0625.312
IN-NOVA PREMIUM WH M A90 cod. 305.0625.311
IN-NOVA PREMIUM WH M A120 cod. 305.0625.240
IN-NOVA PREMIUM BK M A60 cod. 305.0625.239
IN-NOVA PREMIUM BK M A90 cod. 305.0625.238
IN-NOVA PREMIUM BK M A120 cod. 305.0625.237

IN-NOVA PREMIUM EV8+ X A60 cod. 110.0439.940
IN-NOVA PREMIUM EV8+ X A75 cod. 305.0569.170
IN-NOVA PREMIUM EV8+ X A90 cod. 110.0439.951
IN-NOVA PREMIUM EV8+ X A120 cod. 110.0439.952

IN-NOVA PREMIUM X KL A60 cod. 305.0621.943 *
IN-NOVA PREMIUM X KL A90 cod. 305.0621.942 *
IN-NOVA PREMIUM X KL A120 cod. 305.0621.941 *

* K-LINK

SELF - START · REMOTE BLOWER · PERIMETER ASPIRATION · INTENSIVE SPEED · FILTER ALARM · NEW REMOTE CONTROL (optional) · LED LIGHT · A ENERGY

FEATURES	PERFORMANCE					ACCESSORIES	
Finish	**Speed**	1	2	3	INT	**Cod. 112.0157.243**	**Cod. 112.0624.485**
• Stainless steel / Glass visor • White matt / Glass visor • Black matt / Glass visor	**Air capacity IEC point**	280	420	570	670	F9 Charcoal filter	Kit filters stainless steel In-Nova 60
Controls	**Pressure**	420	465	510	520	**Cod. 112.0615.733**	**Cod. 122.0624.486**
Electronic SENSOR	**Input**	175	220	255	270	Remote control	Kit filters stainless steel In-Nova 90
Lighting	**Noise level**	53	62	68	70	**Cod. 112.0327.007**	**Cod. 112.0624.487**
2 LED lights						ENERGY Remote blower kit	Kit filters stainless steel In-Nova 120
Grease filter						**Cod. 112.0185.276**	
Cassettes dishwasher safe						FLL9 Charcoal filter Long Lasting	
Ø of air outlet							
150 / 120 mm							
Width							
600 / 750 / 900 / 1200 mm							
Energy class							
A							

White

Black

IN-NOVA COMFORT

To be installed at a minimum distance from the hob of **53 cm.**

IN-NOVA COMFORT EG6 X A60 cod. 110.0439.937
IN-NOVA COMFORT EG6 X A90 cod. 110.0439.938
IN-NOVA COMFORT EG6 X A120 cod. 110.0439.939

REMOTE BLOWER · LED LIGHT

FEATURES	PERFORMANCE			ACCESSORIES
Finish	**Speed**	1 2 3		**Cod. 112.0441.093**
• Stainless steel	**Air capacity IEC point**	270 410 540		F4-14B Charcoal filter
Controls	**Pressure**	190 260 300		**Cod. 112.0327.007**
Pull out Knob	**Input**	90 105 140		ENERGY Remote blower kit
Lighting	**Noise level**	56 64 69		
2 LED lights				
Grease filter				
Stainless steel cassettes dishwasher safe				
Ø of air outlet				
150 / 120 mm				
Width				
600 / 900 / 1200 mm				
Energy class				
C				

BUILT-IN
BUILT UNDER
TELESCOPIC

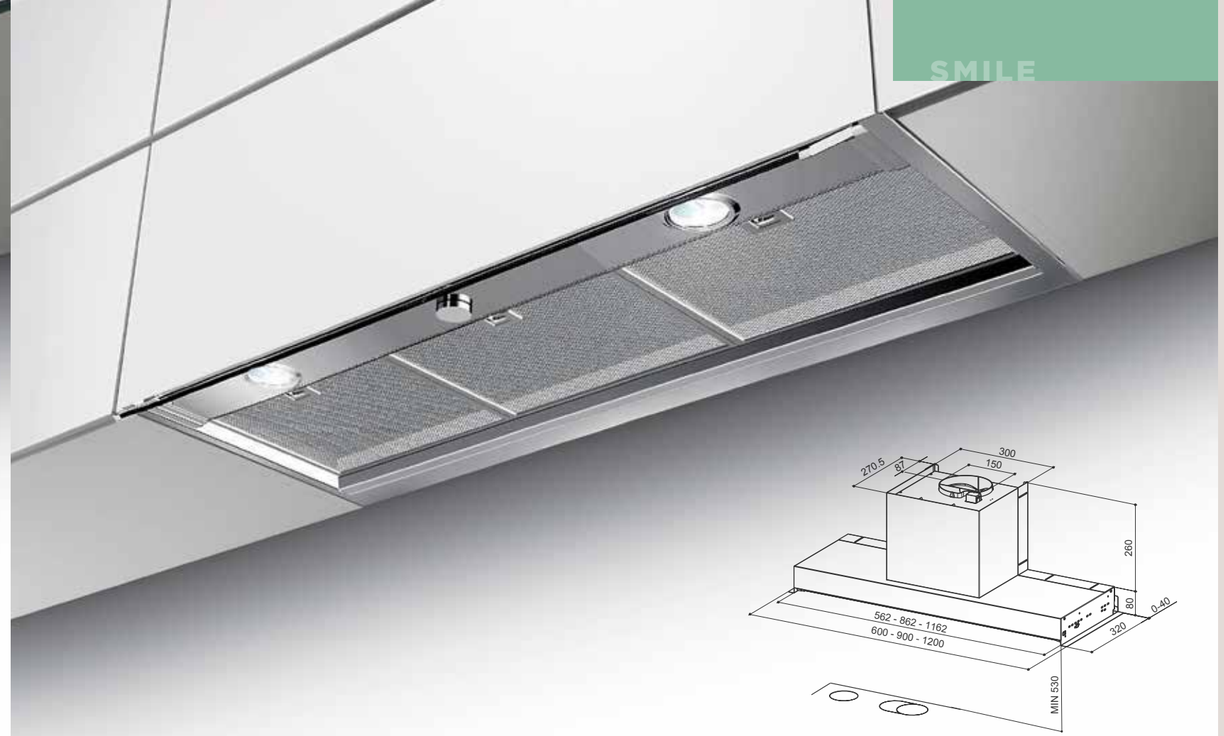

IN-NOVA SMART

To be installed at a minimum distance from the hob of **53 cm.**

IN-NOVA SMART X A120 cod. 305.0554.567
IN-NOVA SMART X A60 cod. 305.0557.680
IN-NOVA SMART X A90 cod. 305.0557.691

LED LIGHT

FEATURES	PERFORMANCE			ACCESSORIES
Finish	**Speed**	1 2 3		**Cod. 112.0067.944**
• Stainless steel	**Air capacity IEC point**	200 260 360		F3 Charcoal filter
Controls	**Pressure**	220 270 290		**Cod. 112.0544.470**
Pull out Knob	**Input**	90 115 145		FLL3 Charcoal filter Long Lasting
Lighting	**Noise level**	57 62 68		
2 LED lights				
Grease filter				
Stainless steel cassettes dishwasher safe				
Ø of air outlet				
150 / 120 mm				
Width				
600 / 900 / 1200 mm				
Energy class				
D				

BUILT-IN
BUILT UNDER
TELESCOPIC

IN-LIGHT

IN-LIGHT EV8+ X KL A52 cod. 110.0456.213
IN-LIGHT EV8+ X KL A70 cod. 110.0456.215
IN-LIGHT EV8+ WH MATT KL A52 cod. 110.0456.216
IN-LIGHT EV8+ WH MATT KL A70 cod. 110.0456.218
IN-LIGHT BK MATT KL A52 cod. 305.0628.270
IN-LIGHT BK MATT KL A70 cod. 305.0628.321

To be installed at a minimum distance from the hob of **50 cm.**

K-LINK · PERIMETER ASPIRATION · INTENSIVE SPEED · DELAY 30 · HOUR 24 · FILTER ALARM · NEW REMOTE CONTROL · LED LIGHT · A ENERGY

FEATURES	PERFORMANCE					ACCESSORIES
Finish	**Speed**	1	2	3	INT	**Cod. 112.0157.240**
• Stainless steel • White matt • Black matt	**Air capacity IEC point**	260	380	525	635	F8 Charcoal filter
Controls	**Pressure**	390	500	510	530	**Cod. 112.0158.127**
Electronic Led	**Input**	170	215	245	275	FHP8 Charcoal filter High Performance
Lighting	**Noise level**	56	65	70	72	**Cod. 112.0185.278**
Perimeter LED light						FLL8 Charcoal filter Long Lasting
Grease filter						
Cassettes dishwasher safe						
Ø of air outlet						
150 / 120 mm						
Width						
520 / 700 mm						
Energy class						
A						

Black matt

To be installed at a minimum distance from the hob of **65 cm.**

INCA LUX GLASS

INCA LUX EV8 X/WH A52 cod. 110.0356.481
INCA LUX EV8 X/BK A52 cod. 110.0356.519
INCA LUX EV8 X/WH A70 cod. 110.0356.541
INCA LUX EV8 X/BK A70 cod. 110.0356.558

INCA LUX EV8 X/BK KL A52 cod. 305.0621.947 *
INCA LUX EV8 X/BK KL A70 cod. 305.0621.948 *

* K-LINK

REMOTE BLOWER (optional) · PERIMETER ASPIRATION · INTENSIVE SPEED · LED LIGHT

FEATURES	520 mm PERFORMANCE				700 mm PERFORMANCE				ACCESSORIES
Finish	**Speed**	1	2	3 INT	**Speed**	1	2	3 INT	**Cod. 112.0157.240**
• Stainless steel / White glass • Stainless steel / Black glass	**Air capacity IEC point**	300	460	590 660	**Air capacity IEC point**	315	480	630 710	F8 Charcoal filter
Controls	**Pressure**	350	440	480 510	**Pressure**	340	450	480 510	**Cod. 112.0327.007**
Electronic	**Input**	145	180	230 250	**Input**	145	180	230 250	ENERGY Remote blower kit
Lighting	**Noise level**	54	65	69 71	**Noise level**	52	62	68 70	**Cod. 112.0158.127**
2 LED lights									FHP8 Charcoal filter High Performance
Grease filter									**Cod. 112.0185.278**
Cassettes dishwasher safe									FLL8 Charcoal filter Long Lasting
Ø of air outlet									
150 / 120 mm									
Width									
520 / 700 mm									
Energy class									
B (700 mm) C (520 mm)									

BUILT-IN
BUILT UNDER
TELESCOPIC

To be installed at a minimum distance from the hob of 53 **cm.**

INCA LUX 2.0

INCA LUX 2.0 EV8 X A52 cod. 110.0327.652
INCA LUX 2.0 EV8 X A70 cod. 110.0327.653

INCA LUX 2.0 EV8 X KL A52 cod. 305.0621.944*
INCA LUX 2.0 EV8 X KL A70 cod. 305.0621.945 *

* K-LINK

REMOTE BLOWER (optional) · PERIMETER ASPIRATION · INTENSIVE SPEED · FILTER ALARM · NEW REMOTE CONTROL (optional) · LED LIGHT

FEATURES	520 mm PERFORMANCE				700 mm PERFORMANCE				ACCESSORIES
Finish	**Speed**	1	2	3 INT	**Speed**	1	2	3 INT	**Cod. 112.0157.240**
• Stainless steel	**Air capacity IEC point**	300	460	590 660	**Air capacity IEC point**	315	480	630 710	F8 Charcoal filter
Controls	**Pressure**	350	440	480 510	**Pressure**	340	450	480 510	**Cod. 112.0615.733**
Electronic Led	**Input**	145	180	230 250	**Input**	145	180	230 250	Remote control
Lighting	**Noise level**	54	65	69 71	**Noise level**	52	62	68 70	**Cod. 112.0327.007**
2 LED lights									ENERGY Remote blower kit
Grease filter									**Cod. 112.0158.127**
Cassettes dishwasher safe									FHP8 Charcoal filter High Performance
Ø of air outlet									**Cod. 112.0185.278**
150 / 120 mm									FLL8 Charcoal filter Long Lasting
Width									
520 / 700 mm									
Energy class									
B (700 mm) C (520 mm)									

BUILT-IN
BUILT UNDER
TELESCOPIC

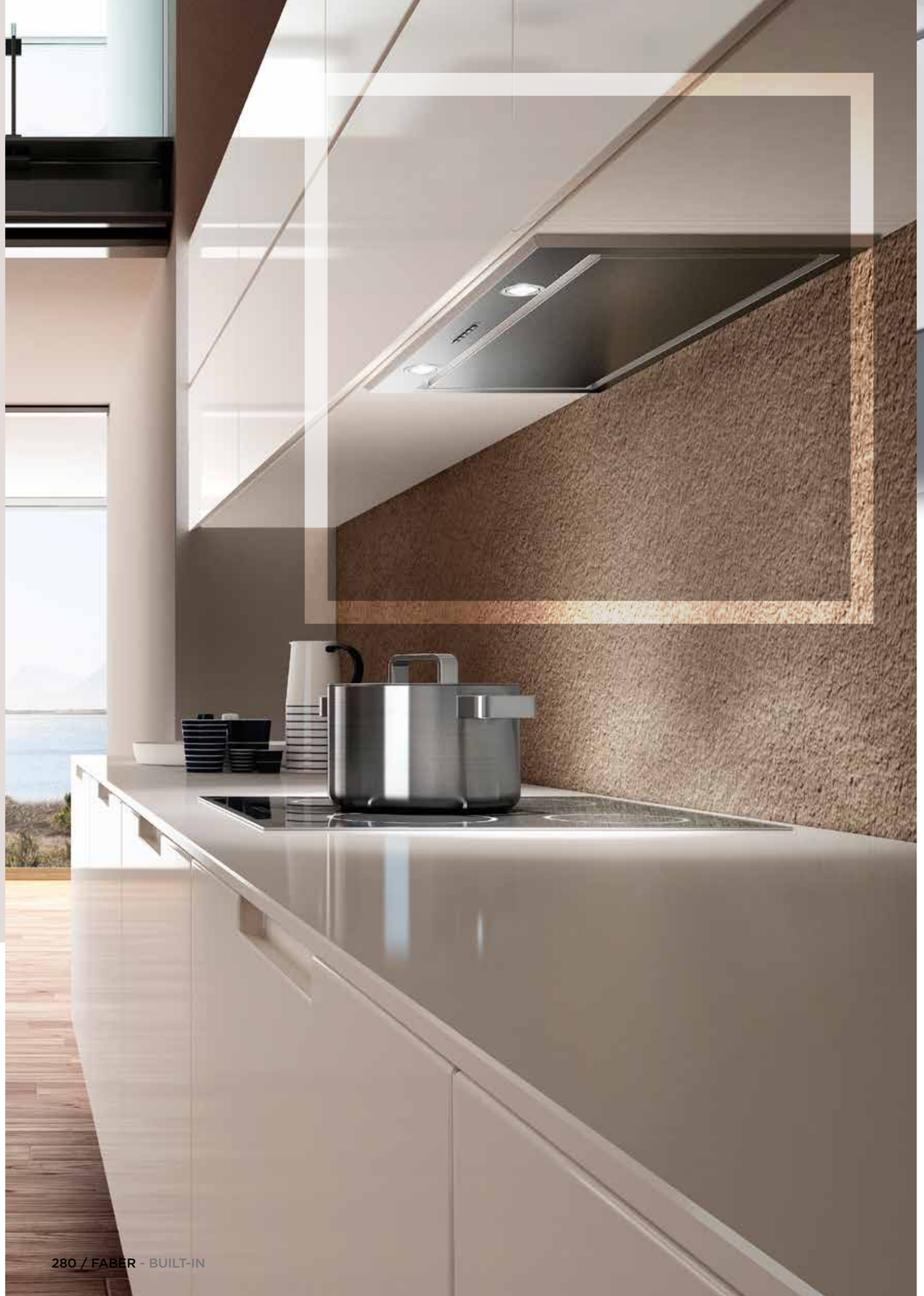

INCA LUX SMART

INKA LUX SMART EV8 X A52 cod. 305.0604.603
INKA LUX SMART EV8 X A70 cod. 305.0604.604

LED LIGHT

FEATURES	PERFORMANCE					ACCESSORIES
Finish	**Speed**	1	2	3	BOOST	**Cod. 112.0157.240**
• Stainless steel	**Air capacity IEC point**	320	490	640	730	F8 Charcoal filter
Controls	**Pressure**	320	460	500	510	**Cod. 112.0158.127**
Electromechanical	**Input**	145	180	230	250	FHP8 Charcoal filter High Performance
Lighting	**Noise level**	52	60	66	70	**Cod. 112.0185.278**
2 LED lights						FLL8 Charcoal filter Long Lasting
Grease filter						
Cassettes dishwasher safe						
Ø of air outlet						
150 / 120 mm						
Width						
520 / 700 mm						
Energy class						
B						

BUILT-IN
BUILT UNDER
TELESCOPIC

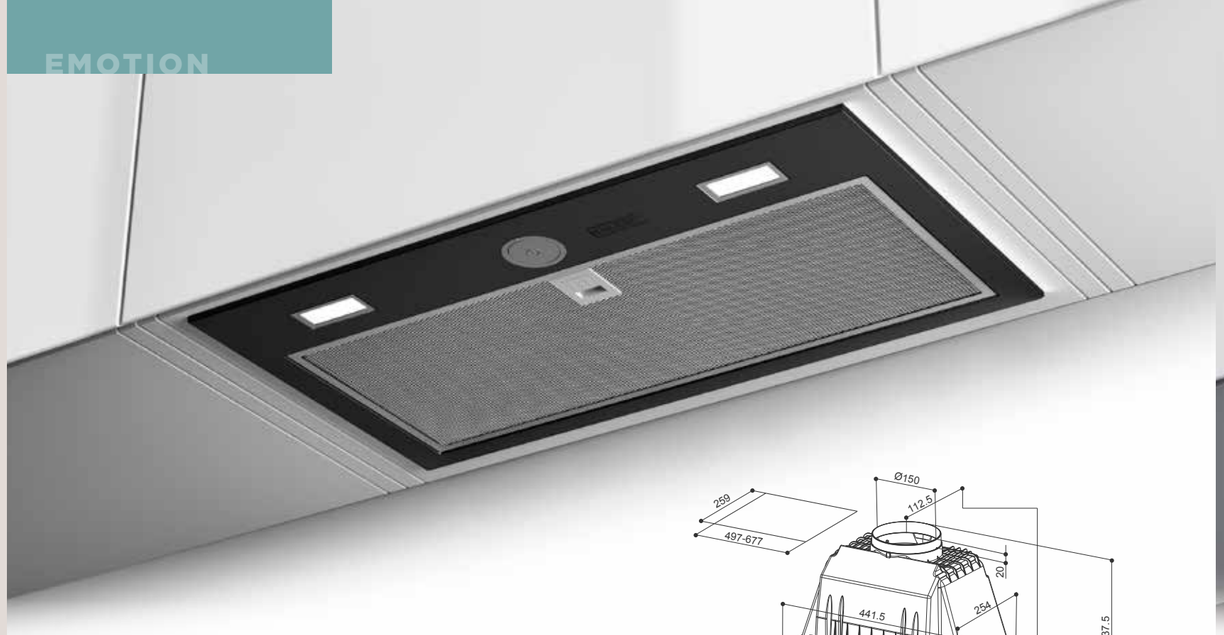

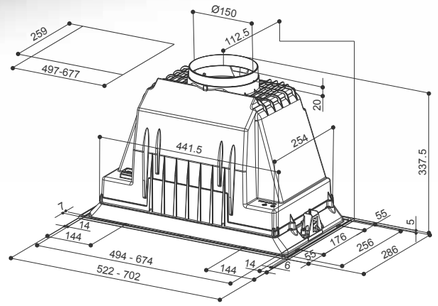

To be installed at a minimum distance from the hob of 65 cm.

INKA PLUS HCS

INKA PLUS HCS X A52 cod. 305.0602.049
INKA PLUS HCS X A70 cod. 305.0602.050

INKA PLUS HCS BK A52 cod. 305.0628.322
INKA PLUS HCS BK A70 cod. 305.0628.323

LED LIGHT

FEATURES	PERFORMANCE				ACCESSORIES
Finish	**Speed**	1	2	3	**Cod. 112.0157.240**
• Stainless steel	**Air capacity IEC point**	260	400	580	F8 Charcoal filter
Controls	**Pressure**	220	280	320	**Cod. 112.0158.127**
Electromechanical	**Input**	95	110	125	FHP8 Charcoal filter High Performance
Lighting	**Noise level**	56	61	70	**Cod. 112.0185.278**
2 LED lights					FLL8 Charcoal filter Long Lasting
Grease filter					
Cassettes dishwasher safe					
Ø of air outlet					
150 / 120 mm					
Width					
520 / 700 mm					
Energy class					
B					

BUILT-IN
BUILT UNDER
TELESCOPIC

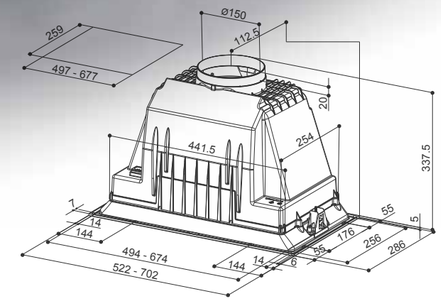

To be installed at a minimum distance from the hob of 65 cm.

INKA PLUS HC

INKA PLUS HC X A52 cod. 305.0602.047
INKA PLUS HC X A70 cod. 305.0602.048

LED LIGHT

FEATURES	PERFORMANCE				ACCESSORIES
Finish	**Speed**	1	2	3	**Cod. 112.0157.240**
• Stainless steel	**Air capacity IEC point**	260	400	580	F8 Charcoal filter
Controls	**Pressure**	220	280	320	**Cod. 112.0158.127**
Electromechanical	**Input**	95	110	125	FHP8 Charcoal filter High Performance
Lighting	**Noise level**	56	61	70	**Cod. 112.0185.278**
2 LED lights					FLL8 Charcoal filter Long Lasting
Grease filter					
Cassettes dishwasher safe					
Ø of air outlet					
150 / 120 mm					
Width					
520 / 700 mm					
Energy class					
B					

BUILT-IN
BUILT UNDER
TELESCOPIC

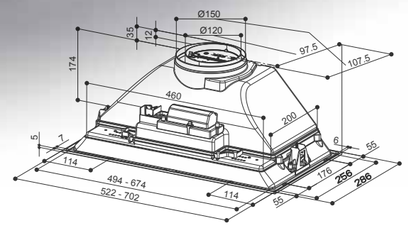

INKA SMART HCS (ICH)

To be installed at a minimum distance from the hob of **65 cm.**

INKA ICH SS A52 (I.SMART HCS) cod. 305.0599.323
INKA ICH SS A70 (I.SMART HCS) cod. 305.0599.321

LED LIGHT

FEATURES	PERFORMANCE				ACCESSORIES
Finish	**Speed**	1	2	3	**Cod. 112.0556.527**
• Stainless steel	**Air capacity IEC point**	180	270	390	F23 Charcoal filter
Controls	**Pressure**	220	240	260	**Cod. 112.0556.528**
Electromechanical	**Input**	80	90	110	FLL23 Charcoal filter Long Lasting
Lighting	**Noise level**	54	62	70	
2 LED lights					
Grease filter					
Cassettes dishwasher safe					
Ø of air outlet					
150 / 120 mm					
Width					
520 / 700 mm					
Energy class					
B					

BUILT-IN
BUILT UNDER
TELESCOPIC

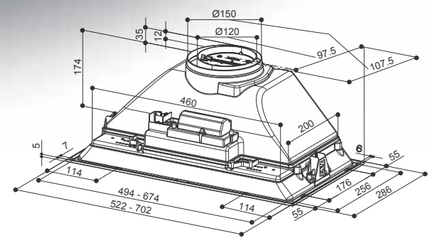

INKA SMART HC

To be installed at a minimum distance from the hob of **65 cm.**

INKA SMART HC X A52 cod. 305.0599.307
INKA SMART HC X A70 cod. 305.0599.308

LED LIGHT

FEATURES	PERFORMANCE				ACCESSORIES
Finish	**Speed**	1	2	3	**Cod. 112.0556.527**
• Stainless steel	**Air capacity IEC point**	180	270	390	F23 Charcoal filter
Controls	**Pressure**	220	240	260	**Cod. 112.0556.528**
Electromechanical	**Input**	80	90	110	FLL23 Charcoal filter Long Lasting
Lighting	**Noise level**	54	62	70	
2 LED lights					
Grease filter					
Cassettes dishwasher safe					
Ø of air outlet					
150 / 120 mm					
Width					
520 / 700 mm					
Energy class					
B					

BUILT-IN
BUILT UNDER
TELESCOPIC

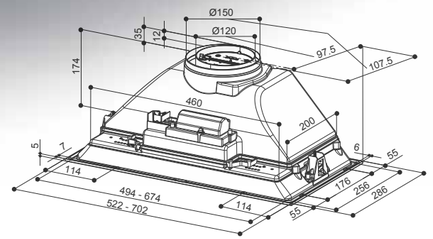

To be installed at a minimum distance from the hob of 65 cm.

INKA SMART C

INKA SMART C LG A52 cod. 305.0599.305
INKA SMART C LG A70 cod. 305.0599.306

LED LIGHT

FEATURES	PERFORMANCE				ACCESSORIES
Finish	**Speed**	1	2	3	**Cod. 112.0556.527**
• Light grey	**Air capacity IEC point**	160	220	335	F23 Charcoal filter
Controls	**Pressure**	230	260	280	**Cod. 112.0556.528**
Electromechanical	**Input**	80	95	115	FLL23 Charcoal filter Long Lasting
Lighting	**Noise level**	54	59	66	
2 LED lights					
Grease filter					
Cassettes dishwasher safe					
Ø of air outlet					
150 / 120 mm					
Width					
520 / 700 mm					
Energy class					
C					

To be installed at a minimum distance from the hob of **65 cm.**

MAXIMA TOUCH

MAXIMA NG TOUCH EV8 LED X A60 cod. 315.0635.146
MAXIMA NG TOUCH EV8 LED X A90 cod. 315.0635.147

REMOTE BLOWER (optional)
LED LIGHT

FEATURES	PERFORMANCE					ACCESSORIES
Finish	**Speed**	1	2	3	INT	**Cod. 112.0157.240**
• Metal aluminium / Stainless steel handle	**Air capacity IEC point**	310	490	640	730	F8 Charcoal filter
Controls	**Pressure**	340	450	490	520	**Cod. 112.0327.007**
Touch control	**Input**	145	180	230	250	ENERGY Remote blower kit
Lighting	**Noise level**	51	61	67	70	**Cod. 112.0158.127**
2 LED lights						FHP8 Charcoal filter High Performance
Grease filter						**Cod. 112.0185.278**
Cassettes dishwasher safe						FLL8 Charcoal filter Long Lasting
Ø of air outlet						
150 / 120 mm						
Width						
600 / 900 mm						
Energy class						
B						

To be installed at a minimum distance from the hob of **65 cm.**

MAXIMA EV8

MAXIMA NG EV8 LED AM/X A60 cod. 315.0635.144
MAXIMA NG EV8 LED AM/X A90 cod. 315.0635.145

REMOTE BLOWER (optional) LED LIGHT

BUILT-IN
BUILT UNDER
TELESCOPIC

FEATURES	PERFORMANCE				ACCESSORIES
Finish	**Speed**	1	2	3	**Cod. 112.0157.240**
• Metal aluminium / Stainless steel handle	**Air capacity IEC point**	310	490	640	F8 Charcoal filter
Controls	**Pressure**	340	450	490	**Cod. 112.0327.007**
Push buttons	**Input**	145	180	250	ENERGY Remote blower kit
Lighting	**Noise level**	51	61	67	**Cod. 112.0158.127**
2 LED lights					FHP8 Charcoal filter High Performance
Grease filter					**Cod. 112.0185.278**
Cassettes dishwasher safe					FLL8 Charcoal filter Long Lasting
Ø of air outlet					
150 / 120 mm					
Width					
600 / 900 mm					
Energy class					
B					

To be installed at a minimum distance from the hob of **65 cm.**

MAXIMA ECO

MAXIMA NG ECO EV8 AM/X A60 cod. 315.0635.140
MAXIMA NG ECO EV8 AM/X A90 cod. 315.0635.143
MAXIMA NG ECO EV8 WH A60 cod. 315.0635.142
MAXIMA NG ECO EV8 WH A90 cod. 315.0635.141

REMOTE BLOWER (optional) LED LIGHT

BUILT-IN
BUILT UNDER
TELESCOPIC

FEATURES	PERFORMANCE				ACCESSORIES
Finish	**Speed**	1	2	3	**Cod. 112.0157.240**
• Metal aluminium / Stainless steel handle • White	**Air capacity IEC point**	310	490	640	F8 Charcoal filter
Controls	**Pressure**	340	450	490	**Cod. 112.0327.007**
Electromechanical Slider	**Input**	145	180	250	ENERGY Remote blower kit
Lighting	**Noise level**	51	61	67	**Cod. 112.0158.127**
2 LED lights					FHP8 Charcoal filter High Performance
Grease filter					**Cod. 112.0185.278**
Cassettes dishwasher safe					FLL8 Charcoal filter Long Lasting
Ø of air outlet					
150 / 120 mm					
Width					
600 / 900 mm					
Energy class					
B					

FLEXA GLASS LUX

FLEXA NG GLASS LUX BK A60 cod. 315.0635.137
FLEXA NG GLASS LUX WH A60 cod. 315.0635.138

LED LIGHT

FEATURES	PERFORMANCE				ACCESSORIES
Finish	**Speed**	1	2	3	**Cod. 112.0067.944**
• White / White glass handle • Black / Black glass handle	**Air capacity IEC point**	220	320	420	F3 Charcoal filter
Controls	**Pressure**	180	200	220	**Cod. 112.0544.470**
Push buttons	**Input**	90	105	140	FLL3 Charcoal filter Long Lasting
Lighting	**Noise level**	57	66	69	
2 LED lights					
Grease filter					
Cassettes dishwasher safe					
Ø of air outlet					
150 / 120 mm					
Width					
600 mm					
Energy class					
D					

FLEXA GLASS

FLEXA NG GLASS BK A60 cod. 315.0635.106
FLEXA NG GLASS W A60 cod. 315.0635.107

LED LIGHT

FEATURES	PERFORMANCE				ACCESSORIES
Finish	**Speed**	1	2	3	**Cod. 112.0067.944**
• White / White glass handle • Black / Black glass handle	**Air capacity IEC point**	180	220	310	F3 Charcoal filter
Controls	**Pressure**	230	250	260	**Cod. 112.0544.470**
Electromechanical slider	**Input**	85	100	125	FLL3 Charcoal filter Long Lasting
Lighting	**Noise level**	57	62	67	
2 LED lights					
Grease filter					
Cassettes dishwasher safe					
Ø of air outlet					
150 / 120 mm					
Width					
600 mm					
Energy class					
D					

To be installed at a minimum distance from the hob of **65 cm.**

FLEXA HIP

FLEXA NG HIP AM/X A50 cod. 315.0635.110
FLEXA NG HIP AM/X A60 cod. 315.0635.133
FLEXA NG HIP AM/X A90 cod. 315.0635.134
FLEXA NG HIP AM/X FIX A50 cod. 315.0635.136
FLEXA NG HIP AM/X FIX A60 cod. 315.0635.135
FLEXA NG HIP W A50 cod. 315.0635.108
FLEXA NG HIP W A60 cod. 315.0635.132
FLEXA NG HIP BK A50 cod. 315.0635.131
FLEXA NG HIP BK A60 cod. 315.0635.109

LED LIGHT

FEATURES	PERFORMANCE				ACCESSORIES
Finish	**Speed**	1	2	3	**Cod. 112.0067.944**
• Metal aluminium / Stainless steel handle • White • Black	**Air capacity IEC point**	220	320	420	F3 Charcoal filter
Controls	**Pressure**	180	200	220	**Cod. 112.0544.470**
Push buttons	**Input**	90	105	140	FLL3 Charcoal filter Long Lasting
Lighting	**Noise level**	57	66	69	
2 LED lights					
Grease filter					
Cassettes dishwasher safe					
Ø of air outlet					
150 / 120 mm					
Width					
600 mm					
Energy class					
D					

BUILT-IN
BUILT UNDER
TELESCOPIC

To be installed at a minimum distance from the hob of **65 cm.**

FLEXA

FLEXA NG AM/X A50 cod. 315.0635.105
FLEXA NG AM/X A60 cod. 315.0635.104
FLEXA NG W/X A50 cod. 315.0635.103
FLEXA NG W/X A60 cod. 315.0635.102

LED LIGHT

FEATURES	PERFORMANCE				ACCESSORIES
Finish	**Speed**	1	2	3	**Cod. 112.0067.944**
• Metal aluminium / Stainless steel handle • White / Stainless steel handle	**Air capacity IEC point**	220	300	350	F3 Charcoal filter
Controls	**Pressure**	260	280	290	**Cod. 112.0544.470**
Electromechanical Slider	**Input**	100	125	138	FLL3 Charcoal filter Long Lasting
Lighting	**Noise level**	59	65	69	
2 LED lights					
Grease filter					
Cassettes dishwasher safe					
Ø of air outlet					
150 / 120 mm					
Width					
600 mm					
Energy class					
D					

BUILT-IN
BUILT UNDER
TELESCOPIC

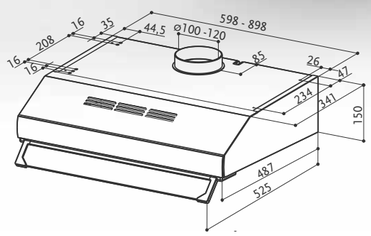

2740 PB

2740 PB SRM X A60 cod. 300.0557.569
2740 PB SRM WH A60 cod. 300.0557.570

LED LIGHT

FEATURES	PERFORMANCE				ACCESSORIES
Finish	**Speed**	1	2	3	**Cod. 112.0157.238**
• Stainless steel • White	**Air capacity IEC point**	205	275	380	F1 Charcoal filter
Controls	**Pressure**	130	240	330	
Push Buttons	**Input**	155	175	230	
Lighting	**Noise level**	55	63	70	
2 LED lights					
Grease filter					
Cassette dishwasher safe					
Ø of air outlet					
100 / 120 mm					
Width					
600 mm					
Energy class					
D					
Blowers					
2					

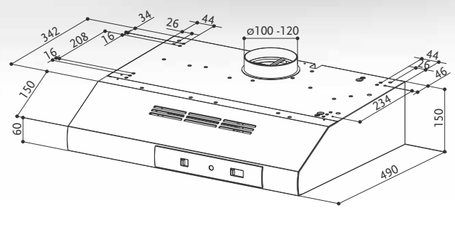

2740 BASE

2740 BASE X A60 cod. 300.0557.534
2740 BASE X A90 cod. 300.0557.546
2740 BASE WH A60 cod. 300.0557.535
2740 BASE WH A70 cod. 300.0557.547
2740 BASE WH A75 cod. 300.0557.549
2740 BASE BR A60 cod. 300.0557.544
2740 BASE BR A70 cod. 300.0557.548
2740 BASE SRM BK A60 (F.M.) cod. 300.0557.536
2740 BASE BR A75 cod. 300.0557.550

LED LIGHT

FEATURES	PERFORMANCE				ACCESSORIES
Finish	**Speed**	1	2	3	**Cod. 112.0157.238**
• Stainless steel • Brown • White	**Air capacity IEC point**	205	275	380	F1 Charcoal filter
Controls	**Pressure**	130	240	330	
Electromechanical	**Input**	155	175	230	
Lighting	**Noise level**	55	63	70	
2 LED lights					
Grease filter					
Synthetic					
Ø of air outlet					
100 / 120 mm					
Width					
600 / 700 mm					
Energy class					
D					
Blowers					
2					

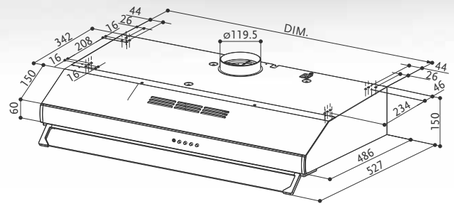

741 PB

741 PB W A50 cod. 300.0557.512
741 PB W A60 cod. 300.0557.513
741 PB X A50 cod. 300.0557.514
741 PB X A60 cod. 300.0557.515

LED LIGHT

FEATURES	PERFORMANCE				ACCESSORIES
Finish	**Speed**	1	2	3	**Cod. 112.0157.238**
• White • Black	**Air capacity IEC point**	135	200	295	F1 Charcoal filter
Controls	**Pressure**	110	230	320	
Push buttons	**Input**	60	80	125	
Lighting	**Noise level**	56	64	69	
2 LED lights					
Grease filter					
Cassette dishwasher safe					
Ø of air outlet					
100 / 120 mm					
Width					
600 / 800 / 900 mm.					
Energy class					
D					
Blowers					
1					

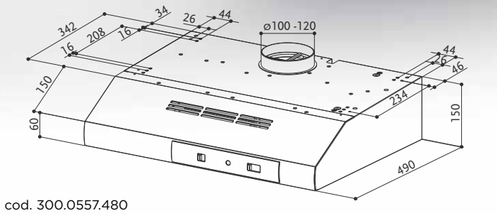

741 BASE

741 BASE W A50 cod. 300.0557.500
741 BASE W A60 cod. 300.0557.477
741 BASE W A90 cod. 300.0557.478
741 BASE X A60 cod. 300.0557.479
741 BASE X A50 cod. 300.0557.501
741 BASE X A 90 cod. 300.0557.480
741 BASE BK A50 cod. 300.0557.496
741 BASE BK A60 cod. 300.0557.497
741 BASE BK A90 cod. 300.0557.498
741 BASE BR A60 cod. 300.0557.499

LED LIGHT

FEATURES	PERFORMANCE				ACCESSORIES
Finish	**Speed**	1	2	3	**Cod. 112.0157.238**
• White • Black • Black body / stainless steel strip	**Air capacity IEC point**	135	200	295	F1 Charcoal filter
Controls	**Pressure**	110	230	320	**Cod. 112.0157.289**
Electromechanical Slider	**Input**	60	80	125	Synthetic filter kit
Lighting	**Noise level**	56	64	69	
2 LED lights					
Grease filter					
Synthetic					
Ø of air outlet					
100 / 120 mm					
Width					
600 / 800 / 900 mm.					
Energy class					
D					
Blowers					
1					

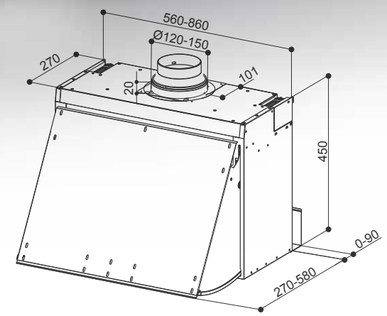

To be installed at a minimum distance from the hob of **53 cm.**

106/45 PLUS

106/45 PLUS WHITE A60 cod. 310.0623.031
106/45 PLUS BROWN A90 cod. 310.0623.032

REMOTE BLOWER
LED LIGHT
(optional)

FEATURES	PERFORMANCE			
Finish	**Speed**	1	2	3
• Light grey	**Air capacity IEC point**	240	320	440
Controls	**Pressure**	150	190	210
Electromechanical	**Input**	85	95	115
Lighting	**Noise level**	53	61	67
2 LED lights				
Grease filter				
Cassettes dishwasher safe				
Ø of air outlet				
150 / 120 mm				
Width				
560 / 860 mm				
Energy class				
C				

ACCESSORIES

Cod. 112.0157.240
F8 Charcoal filter

Cod. 112.0327.007
ENERGY Remote blower kit

Cod. 112.0158.127
FHP8 Charcoal filter High Performance

Cod. 112.0185.278
FLL8 Charcoal filter Long Lasting

COUNTRY

AGORÀ	303
RANCH	304
RANCH ANGOLO	305
TRENDY	301
WEST	302

FABER FOREST AIR

LET'S CHANGE THE AIR OF THE PLANET

FABER TEAMS UP WITH THE TREEDOM REFORESTATION PROJECT
Improving the quality of the air we breathe has always been the goal and dream of Faber. The objective is in tune with the the need of planet Earth to fight air pollution. It is also a real commitment expressed by supporting the Treedom reforestation project.

FORESTS MAKE OUR PLANET BREATHE
All trees are good for the environment. They absorb CO2, emit oxygen, promote biodiversity and much more.
The trees of the Treedom project are also good for the farmers who grow them and draw nourishment and sustenance from them.

FABER FOREST AIR
To support the Treedom project, Faber purchased 200 cocoa trees in a small forest in Cameroon.
All customers who purchase a Country cooker hood, either online or through retailers, will become the custodians of a Faber Forest Air tree and will be able to follow its growth from home.

TRENDY O1 90 SRM NG
White / Oak frame

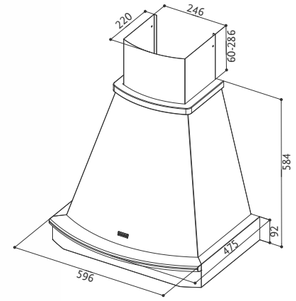

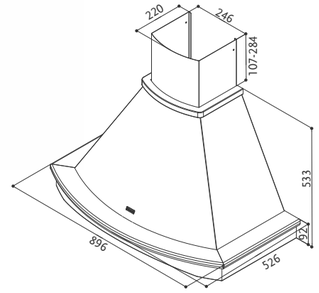

TRENDY

TRENDY O1 60 SRM NG cod. 321.0589.579
TRENDY O1 90 SRM NG cod. 321.0589.580

LED LIGHT

FEATURES	
Finish	• White RAL 9010
Controls	Electromechanical
Lighting	2 LED lights
Greas filter	Cassettes dishwasher safe
Ø of air outlet	150/120 mm
Width	600 / 900 mm
Energy class	C

PERFORMANCES			
Speed	1	2	3
Air capacity IEC point	240	320	440
Pressure	150	190	210
Input	85	95	115
Noise level	54	60	68

ACCESSORIES

Cod. 112.0157.240
F8 Charcoal filter

Cod. 112.0158.127
FHP8 Charcoal filter High Performance

Cod. 112.0185.278
FLL8 Charcoal filter Long Lasting

FRAME FINISH

Finish **O**

Frame finish OAK

Shape **1**

01 - Finish Oak + Frame shape 1

WEST O1 SRM NG
White / Oak frame

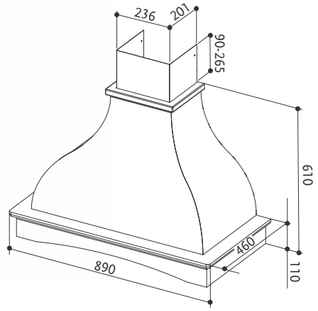

WEST

WEST O1 SRM NG cod. 321.0579.839

LED LIGHT

FEATURES		PERFORMANCES				ACCESSORIES
Finish		**Speed**	1	2	3	**Cod. 112.0157.240**
• White RAL 9010		**Air capacity IEC point**	250	330	460	F8 Charcoal filter
Controls		**Pressure**	150	190	220	**Cod. 112.0158.127**
Electromechanical		**Input**	80	95	115	FHP8 Charcoal filter High Performance
Lighting		**Noise level**	54	61	68	**Cod. 112.0185.278**
2 LED lights						FLL8 Charcoal filter Long Lasting
Greas filter						
Cassettes dishwasher safe						
Ø of air outlet						
150/120 mm						
Width						
900 mm						
Energy class						
C						

FRAME FINISH

Finish **O**

Frame finish OAK

Shape **1**

O1 - Finish Oak + Frame shape 1

AGORA' O3 90 SRM NG
White / Oak frame

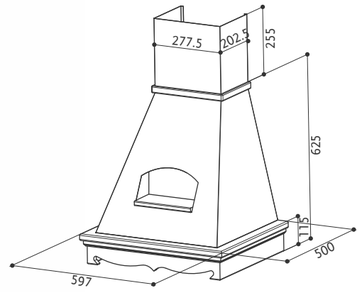

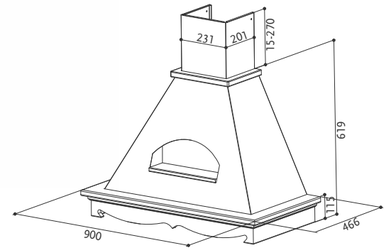

AGORÀ

AGORA' O3 60 SRM NG cod. 321.0589.577
AGORA' O3 90 SRM NG cod. 321.0589.578

LED LIGHT

FEATURES		PERFORMANCES				ACCESSORIES
Finish		**Speed**	1	2	3	**Cod. 112.0157.240**
• White RAL 9010		**Air capacity IEC point**	240	320	455	F8 Charcoal filter
Controls		**Pressure**	160	185	190	**Cod. 112.0158.127**
Electromechanical		**Input**	85	95	115	FHP8 Charcoal filter High Performance
Lighting		**Noise level**	54	60	68	**Cod. 112.0185.278**
2 LED lights						FLL8 Charcoal filter Long Lasting
Greas filter						
Cassettes dishwasher safe						
Ø of air outlet						
150/120 mm						
Width						
600 / 900 mm						
Energy class						
C						

FRAME FINISH

Finish **O**

Frame finish OAK

RANCH O1 90 SRM NG
White / Oak frame

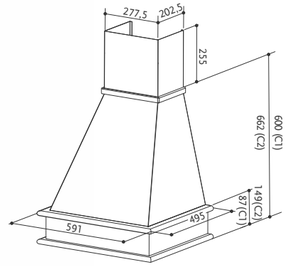

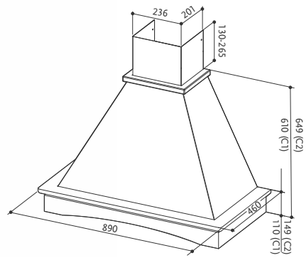

RANCH

RANCH O1 90 SRM NG cod. 321.0579.871
RANCH O1 60 SRM NG cod. 321.0579.872
RANCH A1 90 SRM NG cod. 321.0579.873
RANCH A1 60 SRM NG cod. 321.0579.874
RANCH A2 90 SRM NG cod. 321.0579.875
RANCH A2 60 SRM NG cod. 321.0579.876

LED LIGHT

FEATURES	PERFORMANCES				ACCESSORIES
Finish	**Speed**	1	2	3	**Cod. 112.0157.240**
• White RAL 9010	**Air capacity IEC point**	250	330	460	F8 Charcoal filter
Controls	**Pressure**	150	190	220	**Cod. 112.0158.127**
Electromechanical	**Input**	80	95	115	FHP8 Charcoal filter High Performance
Lighting	**Noise level**	54	61	68	**Cod. 112.0185.278**
2 LED lights					FLL8 Charcoal filter Long Lasting
Greas filter					
Cassettes dishwasher safe					
Ø of air outlet					
150/120 mm					
Width					
600 / 900 mm					
Energy class					
C					

FRAME FINISH

Finish **O**

Frame finish OAK

Finish **A**

Frame finish ALDER

Shape **1**

Shape **2**

01 - Finish Oak + Frame shape 1

02 - Finish Oak + Frame shape 2

COUNTRY

RANCH ANGOLO O2 SRM NG
White / Oak frame

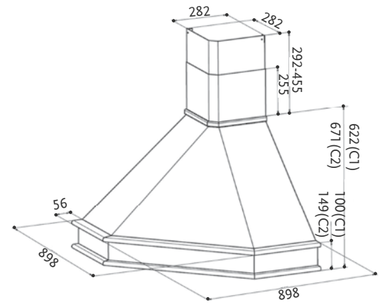

RANCH ANGOLO

RANCH ANGOLO O1 SRM NG cod. 321.0579.837
RANCH ANGOLO O2 SRM NG cod. 321.0579.838

LED LIGHT

FEATURES	PERFORMANCES				ACCESSORIES
Finish	**Speed**	1	2	3	**Cod. 112.0157.240**
• White RAL 9010	**Air capacity IEC point**	250	330	460	F8 Charcoal filter
Controls	**Pressure**	150	190	220	**Cod. 112.0158.127**
Electromechanical	**Input**	80	95	115	FHP8 Charcoal filter High Performance
Lighting	**Noise level**	54	61	68	**Cod. 112.0185.278**
2 LED lights					FLL8 Charcoal filter Long Lasting
Greas filter					
Cassettes dishwasher safe					
Ø of air outlet					
150 mm					
Width					
900 mm					
Energy class					
C					

FRAME FINISH

Finish **O**

Frame finish OAK

Shape **1**

Shape **2**

01 - Finish Oak + Frame shape 1

02 - Finish Oak + Frame shape 2

COUNTRY

HOB

FBH32	315
FBH64	314
FCH64	313
FCH84	312
FCH95	310
FCH SLIM 94	311

HOB

FCH84

EMOTION

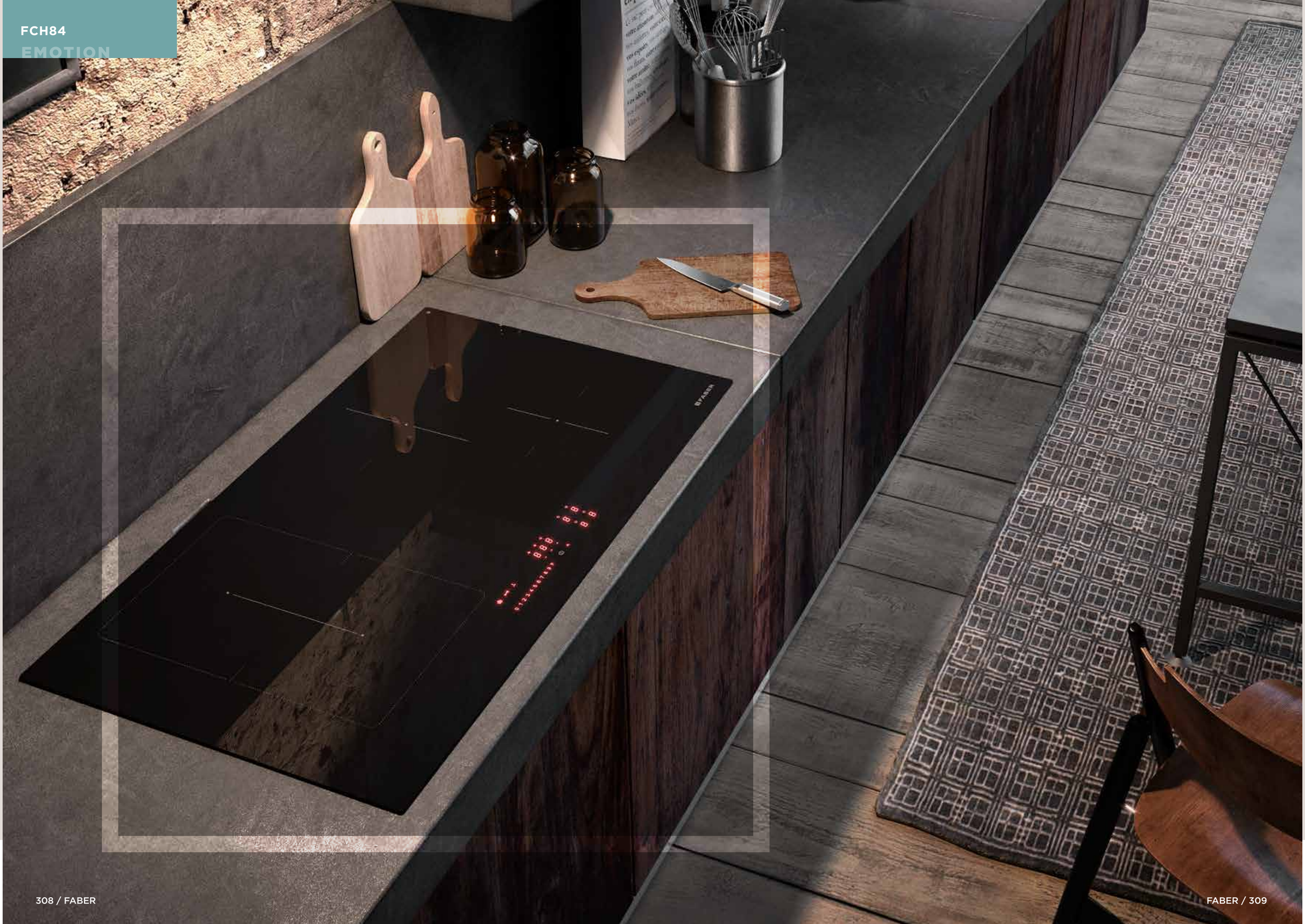

HOB

STANDARD INSTALLATION

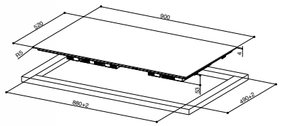

FLUSH FIT INSTALLATION

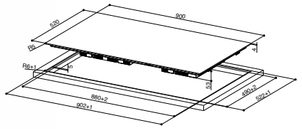

FCH95

FCH 95 BK KL cod. 108.0604.943

K-LINK · POWER MANAGEMENT · [2] BRIDGE ZONE · BOOSTER · TIMER

HOOD&HOB

FEATURES	
Finish	
• Black glass	
Product dimensions LxW (mm)	
900x520	
Induction zone	
5	
Controls	
Slider Touch 9 levels	
Power (W)	
7400	
Voltage (V)	
220/240	
Frequency (HZ)	
50/60	

FUNZIONI	
K-Link* with hood	Yes
Bridge Cooking	Yes (2 zones)
Booster	Yes
Child proof-lock	Yes
Timer	Yes
Pause/Recall	Yes
Overflow safety device	Yes
Automatic heat-up	Yes
Pot Detection	Yes
Residual Heat indication	Yes
Power Limitation	2500w/ 3000w/ 3500w/ 4000w/ 5000w/ 6000w/ full

POWER COOKING ZONE		
1	**Cooking zone** 2100 W 3000 W Booster	210x190
2	**Cooking zone** 2100 W 3000 W Booster	210x190
3	**Cooking zone** 2300 W 3000 W Booster	Ø 200
4	**Cooking zone** 2100 W 3000 W Booster	210x190
5	**Cooking zone** 2100 W 3000 W Booster	210x190

*Requires a Faber hood with K-Link connection

STANDARD INSTALLATION

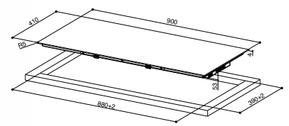

FLUSH FIT INSTALLATION

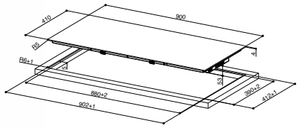

FCH SLIM 94

FCH SLIM 94 BK KL cod. 108.0604.942

K-LINK · POWER MANAGEMENT · [1] BRIDGE ZONE · BOOSTER · TIMER

HOOD&HOB

FEATURES	
Finish	
• Black glass	
Product dimensions LxW (mm)	
900x410	
Induction zone	
4	
Controls	
Multi-Slider Touch 9 levels	
Power (W)	
7400	
Voltage (V)	
220/240	
Frequency (HZ)	
50/60	

FUNZIONI	
K-Link* with hood	Yes
Bridge Cooking	Yes
Booster	Yes
Child proof-lock	Yes
Timer	Yes
Pause/Recall	Yes
Overflow safety device	Yes
Automatic heat-up	Yes
Pot Detection	Yes
Residual Heat indication	Yes
Power Limitation	2500w/ 3000w/ 3500w/ 4000w/ 5000w/ 6000w/ full

POWER COOKING ZONE		
1	**Cooking zone** 2100 W 3000 W Booster	210x190
2	**Cooking zone** 2100 W 3000 W Booster	210x190
3	**Cooking zone** 1400 W 2100 W Booster	Ø 160
4	**Cooking zone** 2300 W 3000 W Booster	Ø 200

*Requires a Faber hood with K-Link connection

Black glass

STANDARD INSTALLATION

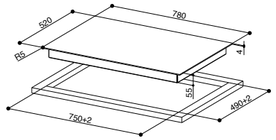

FLUSH FIT INSTALLATION

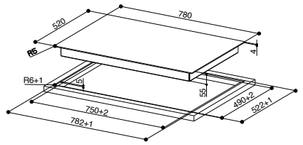

FCH84

FCH 84 BK KL cod. 108.0604.935
FCH 84 GR KL cod. 108.0604.936

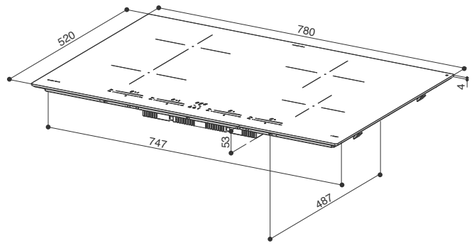

HOOD&HOB

FEATURES	
Finish	
• Black glass • Grey glass	
Product dimensions LxW (mm)	
780x520	
Induction zone	
4	
Controls	
Slider Touch 9 levels	
Power (W)	
7400	
Voltage (V)	
220/240	
Frequency (HZ)	
50/60	

FUNZIONI	
K-Link* with hood	Yes
Bridge Cooking	Yes
Booster	Yes
Child proof-lock	Yes
Timer	Yes
Pause/Recall	Yes
Automatic heat-up	Yes
Pot Detection	Yes
Residual Heat indication	Yes
Power Limitation	2500w/ 3000w/ 3500w/ 4000w/ 5000w/ 6000w/ full

POWER COOKING ZONE		
1	**Cooking zone** 2100 W 3000 W Booster	210x190
2	**Cooking zone** 2100 W 3000 W Booster	210x190
3	**Cooking zone** 2300 W 3000 W Booster	Ø 200
4	**Cooking zone** 1400 W 2100 W Booster	Ø 160

Grey glass

*Requires a Faber hood with K-Link connection

Black glass

STANDARD INSTALLATION

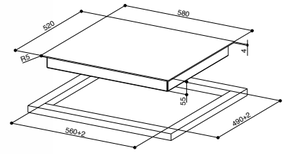

FLUSH FIT INSTALLATION

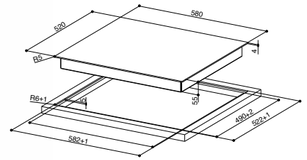

FCH64

FCH 64 BK KL cod. 108.0604.933
FCH 64 GR KL cod. 108.0604.934

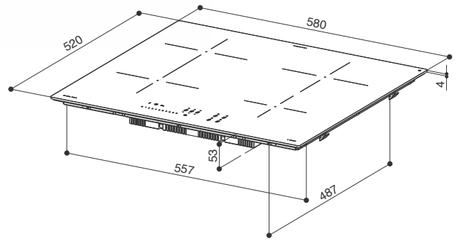

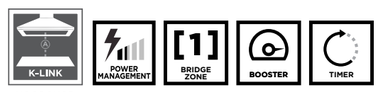

HOOD&HOB

FEATURES	
Finish	
• Black glass • Grey glass	
Product dimensions LxW (mm)	
580x520	
Induction zone	
4	
Controls	
Slider Touch control	
Power (W)	
7400	
Voltage (V)	
220/240	
Frequency (HZ)	
50/60	

FUNZIONI	
K-Link* with hood	Yes
Bridge Cooking	Yes
Booster	Yes
Child proof-lock	Yes
Timer	Yes
Pause/Recall	Yes
Overflow safety device	Yes
Automatic heat-up	Yes
Pot Detection	Yes
Residual Heat indication	Yes
Power Limitation	2500w/ 3000w/ 3500w/ 4000w/ 5000w/ 6000w/ full

POWER COOKING ZONE		
1	**Cooking zone** 2100 W 3000 W Booster	210x190
2	**Cooking zone** 2100 W 3000 W Booster	210x190
3	**Cooking zone** 2300 W 3000 W Booster	Ø 200
4	**Cooking zone** 1400 W 1850 W Booster	Ø 145

Grey glass

*Requires a Faber hood with K-Link connection

STANDARD INSTALLATION

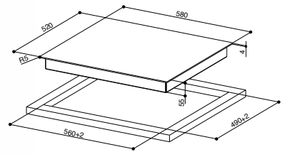

FLUSH FIT INSTALLATION

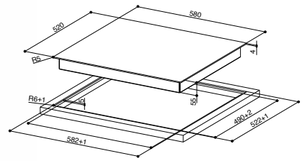

FBH64

FBH 64 BK FFI cod. 108.0604.932

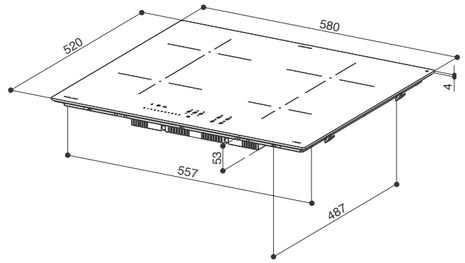

POWER MANAGEMENT · BOOSTER · TIMER

FEATURES	FUNZIONI		POWER COOKING ZONE		
Finish	**K-Link with hood**	No	**1** **Cooking zone**	1400 W 2100 W Booster	Ø 160
• Black glass					
Product dimensions LxW (mm)	**Bridge Cooking**	No	**2** **Cooking zone**	1400 W 2100 W Booster	Ø 160
580x520					
Induction zone	**Booster**	Yes	**3** **Cooking zone**	2300 W 3000 W Booster	Ø 200
4					
Controls	**Child proof-lock**	Yes	**4** **Cooking zone**	1400 W 1850 W Booster	Ø 145
Touch 9 levels					
Power (W)	**Timer**	Yes			
7400					
Voltage (V)	**Pause/Recall**	No			
220/240					
Frequency (HZ)	**Overflow safety device**	Yes			
50/60					
	Automatic heat-up	No			
	Pot Detection	Yes			
	Residual Heat indication	Yes			
	Power Limitation	2500w/ 3000w/ 3500w/ 4000w/ 5000w/ 6000w/ full			

STANDARD INSTALLATION

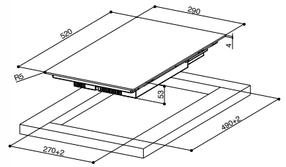

FLUSH FIT INSTALLATION

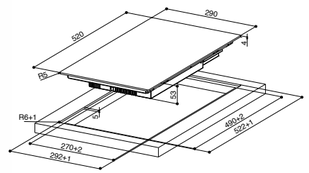

FBH32

FBH 32 BK FFI cod. 108.0604.931

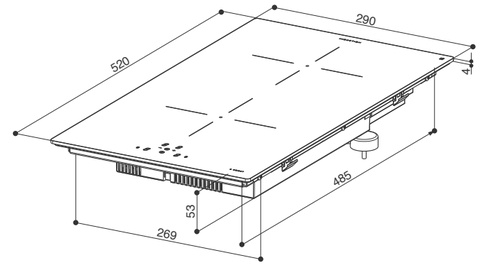

POWER MANAGEMENT · BOOSTER · TIMER

FEATURES	FUNZIONI		POWER COOKING ZONE		
Finish	**K-Link with hood**	No	**1** **Cooking zone**	1400 W 2100 W Booster	Ø 160
• Black glass					
Product dimensions LxW (mm)	**Bridge Cooking**	No	**2** **Cooking zone**	1400 W 2100 W Booster	Ø 160
290x520					
Induction zone	**Booster**	Yes			
2					
Controls	**Child proof-lock**	Yes			
Touch 9 levels					
Power (W)	**Timer**	Yes			
3700					
Voltage (V)	**Pause/Recall**	No			
220/240					
Frequency (HZ)	**Overflow safety device**	Yes			
50/60					
	Automatic heat-up	No			
	Pot Detection	Yes			
	Residual Heat indication	Yes			
	Power Limitation	1500W/ 2000W/ 2500W/ 3000W/ 3500W/ full			

ACCESSORIES

REMOTE BLOWER KIT

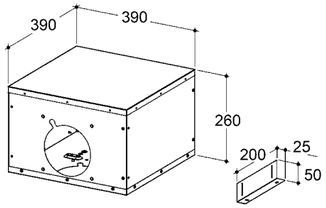

Ø 150 mm
ingoing / outlet

KIT ASPIRAZIONE REMOTA ENERGY
cod. 112.0327.007

- Chloè
- Chloè XL
- Cylindra
- Cylindra Gloss Plus
- Cylindra Isola
- Cylindra Isola Gloss Plus
- Cubia Plus
- Cubia Gloss Plus
- Cubia Isola Plus
- Cubia Isola Gloss Plus
- Daisy
- Eclipse
- Glassy Isola
- Heaven 2.0
- Heaven Glass 2.0
- Inca Lux 2.0
- Inca Lux Glass
- In-Nova Comfort
- In-Nova Premium
- Maxima
- Nice
- Premio Angolo/SP
- Ray
- Solaris
- Stilo Angolo
- Stilo DX-SX
- Stilo Isola/SP
- Tender
- Thea
- Tratto Isola

KIT ASPIRAZIONE REMOTA FABULA
cod. 112.0327.008

- Fabula Plus

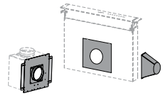

REMOTE EXTERNAL

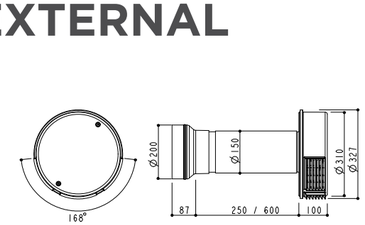

Color CREAM
net weight 7 kg

MISTRAL OUTDOOR
cod. 112.0365.067

CEILING

Heaven Glass 2.0

HEAVEN GLASS 2.0 WH 90 RB
cod. 110.0360.434

Heaven 2.0

HEAVEN 2.0 X 90 RB
cod. 110.0360.483

BUILT-IN DESIGN

Fabula

FABULA BK 90 RB
cod. 110.0360.581

WALL

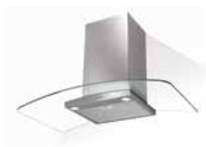

Ray

RAY X/V 90 RB
cod. 110.0360.512

Stilo

STILO X 60 RB
cod. 110.0360.445
STILO X 90 RB
cod. 110.0360.447
STILO X 120 RB
cod. 110.0360.448

ISLAND

Stilo Isola

STILO ISOLA X 90 RB
cod. 110.0360.352
STILO ISOLA X 120 RB
cod. 110.0360.353

CHIMNEYS

UPPER
KIT ALTO H990 X cod. 112.0157.252

- Nice
- Ray
- Stilo DX-SX

UPPER
KIT CAMINO SUP.ALTO BK MATT H990 cod. 112.0621.232

- Stilo Comfort BK

UPPER
KIT CAMINO SUP.ALTO WH MATT H990 cod. 112.0623.756

- Stilo Comfort WH

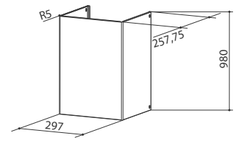

UPPER
KIT SOLARIS H990 X cod. 112.0157.261

- Solaris

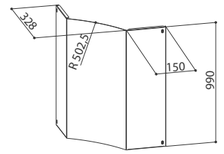

UPPER
KIT TENDER H990 X cod. 112.0157.262

- Tender

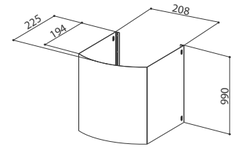

UPPER
KIT PREMIO ANGOLO H990 X cod. 112.0157.263

- Premio Angolo/SP
- Stilo Angolo

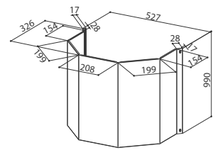

UPPER
KIT ISOLA H990 D370 WH cod. 112.0286.014

- Cylindra Isola

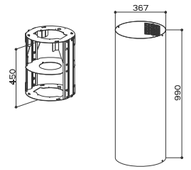

KIT A500+A500 BK cod. 112.0250.290

- Cocktail BK

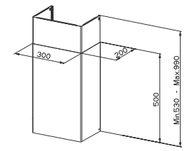

KIT CAMINO ISOLA H450-590 CAST IRON
cod. 112.0516.426

- Chloè XL Isola

KIT CAMINO ISOLA H450-590 COUNTRY GREY MATT
cod. 112.0516.427

- Chloè XL Isola

KIT CAMINO ISOLA H450-590 WHITE MATT
cod. 112.0516.428

- Thea Isola

KIT CAMINO ISOLA H450-590 DARK GREY MATT
cod. 112.0516.430

- Thea Isola

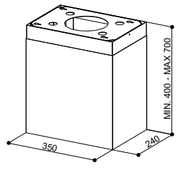

KIT CHIMNEY 300X160 H990 BK cod. 112.0569.164

KIT CHIMNEY 300X160 H990 WH cod. 112.0569.163

- Glam Fit
- Glam Fit Zero Drip Plus
- Soft Slim

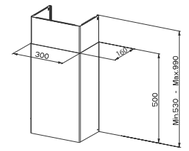

SPLASHBACKS AND CORNER ADAPTER

ANGOLO / CORNER
KIT FONDALE PREMIO ANGOLO X cod. 112.0157.273

- Premio Angolo/SP A100

ANGOLO / CORNER
KIT 3 FONDALI EGYZIA ANGOLO X cod. 112.0157.274

- Solaris
- Stilo Angolo

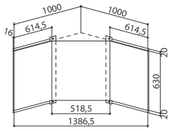

KIT ADATTATORE ANGOLO X cod. 112.0157.284

- Premio Angolo/SP
- Stilo Angolo

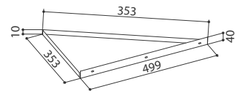

FLAT AIR-DUCT SYSTEM Ø 120 mm

TUBO TR 1500 cod. 112.0157.294

Flat duct TR 1500
220x55x1500 mm

- Galileo 60 H
- Galileo Smart 60 H

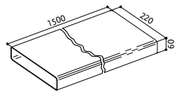

RACCORDO RRC cod. 112.0157.296

Round to rectangular
adapter

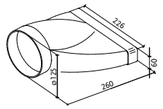

CURVA CRCV 90 REVERSIBILE cod. 112.0157.298

Vertical 90°elbow bend

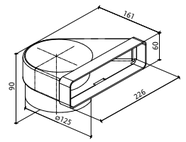

CURVA CRO 90 cod. 112.0157.300

Horizontal 90° bend

- Galileo 60H
- Galileo Smart 60H
(uscita laterale - lateral outlet)

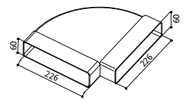

GRIGLIA GRE cod. 112.0157.304

Rectangular louvred grille

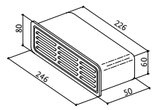

CURVA CRCO 90 REVERSIBILE cod. 112.0157.306

Horizontal 90° elbow bend

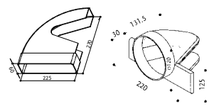

TUBO TC 1000 cod. 112.0157.308

Round pipe TC 1000

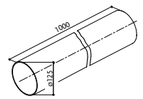

RACCORDO RCR cod. 112.0157.295

Flat duct connector

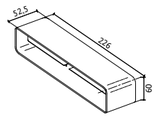

RACCORDO RPR cod. 112.0157.297

Wall connector

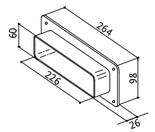

CURVA CRV 90 cod. 112.0157.299

Vertical 90° bend

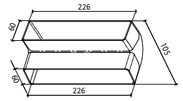

RACCORDO 60H cod. 112.0557.017

Reducer to 60 mm

- Galileo 60H
- Galileo Smart 60 H

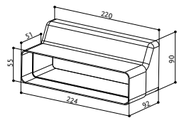

TUBO TCF 130 cod. 112.0157.301

Flexible hose

L = 1,5 m Ø 130 mm

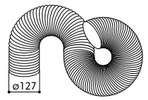

GRIGLIA GDC 125 cod. 112.0157.303

Round louvred grille
Ø 125 mm

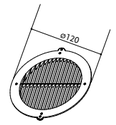

FASCETTA FRF cod. 112.0157.305

Bracket

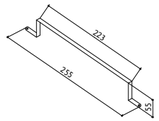

CURVA CC 90 cod. 112.0157.307

Right angle bend 90°
Ø 125 mm

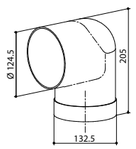

FLANGIA 2 FR cod. 112.0157.309

Flange

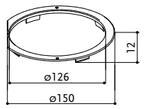

DUCT CONNECTOR RR cod. 112.0557.017

NOTE: Minimum order 10 pieces per code (or multiples of 10)

FLAT AIR-DUCT SYSTEM Ø 150 mm OR EQUIVALENT

TUBO TR 1200 220x90 cod. 112.0459.427

Flat duct TR 1200 220x90 mm

- Galileo 100 H
- Galileo Smart 100 H
- Heaven 2.0 Flat
- Heaven Glass 2.0 Flat
- High-Light

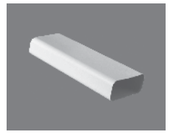

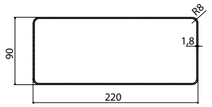

RACCORDO RRC 220x90 cod. 112.0459.429

Round to rectangular adapter 220x90 mm

- Heaven 2.0 Flat
- Heaven Glass 2.0 Flat
- High-Light

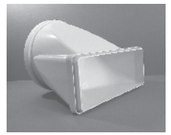

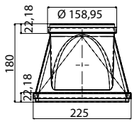

CURVA CRV 90 220x90 cod. 112.0459.453

Vertical 90° bend 220x90 mm

- Heaven 2.0 Flat
- Heaven Glass 2.0 Flat
- High-Light

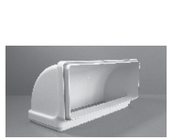

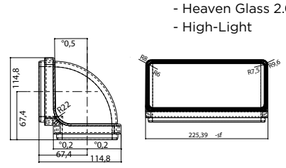

FASCETTA FRF 220x90 cod. 112.0459.456

Bracket 220x90 mm

- Heaven 2.0 Flat
- Heaven Glass 2.0 Flat
- High-Light

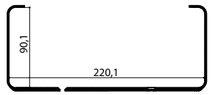

RACCORDO flessibile RF 600 cod. 112.0280.685

Flexible connector

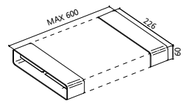

CURVA TONDA 90° D150 cod. 112.0253.688

Right angle bend 90°
Ø 150 mm

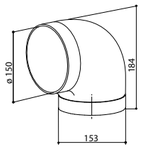

GRIGLIA DIREZIONATA D150 ABS V0 W cod. 133.0016.964

NOTE
Minimum order 10 pieces per code (or multiples of 10)

RACCORDO RCR 220x90 cod. 112.0459.428

Flat duct connector 220x90 mm

- Heaven 2.0 Flat
- Heaven Glass 2.0 Flat
- High-Light

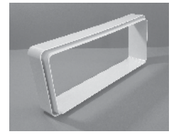

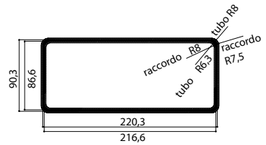

CURVA CRC 90 220x90 cod. 112.0459.451

90° Elbow bend 220x90 mm

- Heaven 2.0 Flat
- Heaven Glass 2.0 Flat
- High-Light

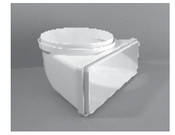

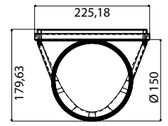

CURVA CRO 90 220x90 cod. 112.0459.455

Horizontal 90° bend 220x90 mm

- Galileo 100 H
- Galileo Smart 100 H
- Heaven 2.0 Flat
- Heaven Glass 2.0 Flat
- High-Light

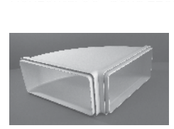

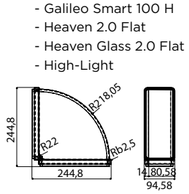

TUBO D150 1000 cod. 112.0253.681

Round pipe TC 1000
Ø 150 mm

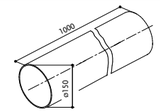

TUBO TCF 150 L=1,5 M. cod. 112.0280.687

Flexible hose

L = 1,5 m Ø 150 mm

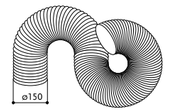

GIUNTO TONDO D150 cod. 112.0253.690

Round connector
Ø 150 mm

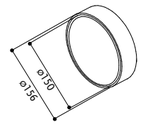

PIPE GRID 220X90 cod. 112.0605.516

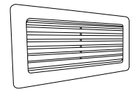

VALVE

NO RETURN VALVE D120 cod. 112.0189.207

NO RETURN VALVE D100 cod. 112.0572.297

NO RETURN VALVE 3D D150 cod. 112.0569.781

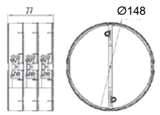

NO RETURN VALVE 3D D125 cod. 112.0569.782

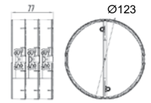

KIT VALVE D150 cod. 112.0086.450

DUCT W/VALVE HERMETIC D150 cod. 112.0569.783

DUCT W/VALVE HERMETIC D125 cod. 112.0569.784

NO RETURN VALVE 220X90 cod. 112.0605.517

REMOTE CONTROL

TELECOMANDO 7T PREMIUM cod. 112.0615.733

- Bi-Air
- Belle
- Bella Comfort
- Bella Comfort Isola
- Belle Plus
- C-Air
- Celine
- Celine Plus
- Chloè
- Corinthia Isola
- Cubia Plus
- Cubia Gloss Plus
- Cubia Isola Plus
- Cubia Isola Gloss Plus
- Cylindra
- Cylindra Gloss Plus
- Cylindra Isola
- Cylindra Isola Gloss Plus
- Fabula Plus
- Glam Fit (Grey)
- Glow
- Glow Plus
- Grexia
- Hava
- Heaven 2.0
- Heaven Air
- Heaven Glass 2.0 Flat
- K-Air
- High Light
- Ilma
- In-Light
- In-Nova Air
- In-Nova Premium
- In-Nova Touch
- In-Nova Zero Drip
- Inca Lux 2.0
- Inside Up
- Lybra Plus
- Nest Plus
- Odette
- Odette Plus
- Onyx-C **NEW**
- Onyx-T
- Onyx-V
- Pareo Plus
- Pyana
- Skylift
- Skypad
- Soft Cube
- Soft Edge
- Soft Slim
- T-Air
- T-Dark
- T-Light
- T-Light Isola
- Talika
- Twice
- V-Air
- V-Air Flat
- Zoom

CLIN&CLIN

CLEANING CLOTHES KIT CLIN&CLIN (5 PIECES)
cod. 112.0157.293

NOTE
Cloths: minimum order 30 packagings or multiples of 30

REVITALISING PASTE 55 ML
cod. 112.0157.501

NOTE
Paste: minimum order 10 pieces or multiples of 10 (55 ml)

REVITALISING PASTE 200 ML
cod. 112.0157.502

NOTE
Paste: minimum order 6 pieces or multiples of 6 (200 ml)

FABER LIGHTING KIT

KIT 6 LED G9 2,5 W cod. 112.0505.117

- Nest Plus

SYNTHETIC FILTER

KIT FILTRO SINTETICO cod. 112.0157.289

- 152 LG

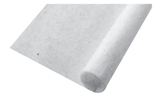

GREASE FILTERS

KIT 1 FILTRO ESTRAIBILI 60 cod. 112.0157.248

1 BLOWER
- 152 LG

2 BLOWERS
- 2152
- 2156

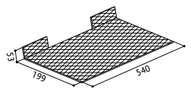

KIT 1 FILTRO ESTRAIBILI 90 cod. 112.0157.249

1 BLOWER
- 152 LG

2 BLOWERS
- 2152
- 2156

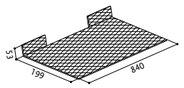

KIT FILTRI INOX IN-NOVA 60 cod. 112.0624.485

KIT FILTRI INOX IN-NOVA 90 cod. 112.0624.486

KIT FILTRI INOX IN-NOVA 120 cod. 112.0624.487

REAR AIR OUTLET KIT

KIT USCITA ARIA POST.CHLOÈ OLD METAL
cod. 112.0490.249

KIT USCITA ARIA POST.CHLOÈ OLD COPPER
cod. 112.0490.250

KIT USCITA ARIA POST.CHLOÈ CAST IRON
cod. 112.0490.261

KIT USCITA ARIA POST.CHLOÈ OLD BRASS
cod. 112.0490.262

KIT USCITA ARIA POST.CHLOÈ DG MATT
cod. 112.0490.263

KIT USCITA ARIA POST.CHLOÈ' CG MATT
cod. 112.0490.264

- Chloè

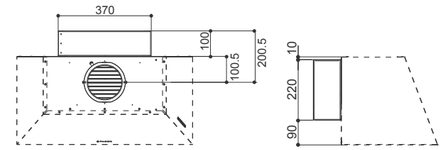

The kit is matched to the color of the hood

RECYCLING KIT

C.A. HFH cod. 112.0327.631

- Bella Comfort
- Nice
- Ray
- Stilo DX-SX
- Stilo Comfort
- Stilo Glass Smart
- Stilo Smart

KIT FILTRANTE WH cod. 112.0252.439

- Daisy WH
- Glam-Light WG1C/WG3C
- Glam-Light WH/T
- Glam-Light WH/WG

KIT FILTRANTE BK cod. 112.0252.442

- Daisy BK
- Glam-Light DG/LG

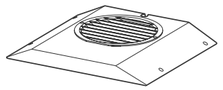

KIT FILTRANTE HAVA cod. 112.0576.982

- Hava

Long Lasting Filter filter included

KIT FILTRANTE TUBAZIONE RETTANGOLARE
cod. 112.0470.541

- Fabula Plus

Long Lasting Filter- PANEL KIT C.A. included

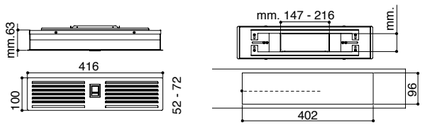

KIT FILTRANTE T-SHAPE PARETE
cod. 112.0626.902

- Bella Comfort
- Nice
- Ray
- Onyx-T
- T-Air
- T-Dark
- T-Light
- Stilo Comfort
- Stilo Dx/Sx
- Stilo Glass Value
- Stilo Smart

KIT FILTRANTE T-SHAPE ISOLA
cod. 112.0626.903

- Bella Comfort
- Bella Comfort Isola
- Glassy Isola
- T-Light
- T-Shelf
- Stilo Comfort Isola
- Stilo Glass Value Isola

GALILEO INSTALLATION KIT

RECYCLING KIT H60 cod. 112.0540.730

- Galileo
- Galileo Smart

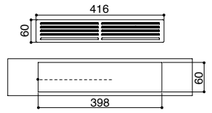

Ceramic filter included

RECYCLING KIT H100 cod. 112.0540.781

- Galileo
- Galileo Smart

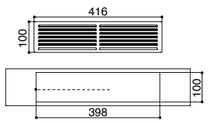

Ceramic filter included

DUCTING KIT cod. 112.0540.782

- Galileo
- Galileo Smart

KIT RECYCLING LONG LASTING H80 cod. 112.0605.735

- Galileo
- Galileo Smart

Long Lasting filter included

KIT FILTRANTE ALTEZZA H60 cod. 112.0626.656

- Galileo 60

KIT FILTRANTE ALTEZZA H100 cod. 112.0626.657

- Galileo 60

REFILL

REFILL CERAMIC H100 cod. 112.0548.448

- Galileo
- Galileo 60
- Galileo Smart
- Skylift

order 2 pieces for skylift model

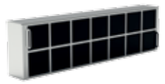

REFILL CERAMIC H60 cod. 112.0548.447

- Galileo
- Galileo 60
- Galileo Smart

REFILL LONG LASTING H80 cod. 112.0605.736

- Galileo
- Galileo 60
- Galileo Smart

REFILL C.A. TUBAZIONE RETTANGOLARE
cod. 112.0472.396

- Fabula Plus

REFILL 2 C.A. HAVA cod. 112.0576.981

- Hava

REFILL 1 C.F. HFH cod. 112.0261.791

KIT ASPIRANTE F-LIGHT

F-LIGHT DUCTING KIT

KIT ASPIRANTE F-LIGHT cod. 112.0169.216

- Lybra Plus
- Nest Plus
- Zoom Plus

Ø 150 mm - **length 1 meter**

KIT AIRLANE ASPIRANTE cod. 112.0542.875

- Belle
- Belle Plus
- Cèline
- Cèline Plus
- Glow
- Glow Plus
- Odette
- Odette Plus

CHARCOAL FILTERS LONG LASTING

Multi-layer filter, it guarantees a double filtration and an optimal air cleanliness, it has a duration of up to 3 years.

dishwasher safe

FLL3 KIT 2.C.A. LONG LASTING
cod. 112.0544.470

- Flexa HIP
- In-Nova Smart
- Value

FLL8 KIT 2 C.A. LONG LASTING D196 H37
cod. 112.0185.278

- Agorà
- Bi-Air
- Beat
- Belle
- Belle Plus
- C-Air
- Cèline
- Cèline Plus
- Chloè XL
- Chloè XL Isola
- Cocktail
- Cubia Plus
- Cubia Gloss Plus
- Daisy
- Glam-Light
- Glam Light Zero Drip Plus
- Glow
- Glow Plus
- Grèxia
- Heaven 2.0
- In-Light
- Inca Lux 2.0
- Inca Lux Glass
- Inka Plus
- K-Air
- Lithos
- Lybra Plus
- Maxima
- Nest Plus
- Odette
- Odette Plus
- Onyx-C
- Onyx-V
- Ranch
- Soft Cube
- Solaris
- Tender
- Thea
- Thea Isola
- Trendy
- T-Shelf
- Tweet
- V-Air
- West
- West Angolo
- Zoom Plus
- 106/35 Plus

KIT FLL23 C.A. D125 cod. 112.0556.528

- Inka ICH (i.smart HCS)
- Inka Smart C
- Inka Smart HC

FLL9 KIT 1 C.A. LONG LASTING EASY CUBE 267x235
cod. 112.0185.276

- Bella Comfort
- Bella Comfort Isola
- Corinthia Isola
- Cubia Isola Plus
- Cubia Isola Gloss Plus
- Cylindra
- Cylindra Isola
- Cylindra Gloss Plus
- Cylindra Isola Gloss Plus
- Eclipse
- Glassy Isola
- In-Nova Premium
- In-Nova Touch
- In-Nova Zero Drip
- Nice
- Onyx-T
- Premio Angolo/SP
- Ray
- Stilo Angolo
- Stilo Isola/SP
- Stilo Comfort
- Stilo Comfort Isola
- Stilo Glass Smart
- Stilo Glass Smart Isola
- Stilo Smart
- Stilo DX-SX
- T-Air
- T-Dark
- T-Light
- T-Light Isola
- Tratto Isola

FLL12 KIT C.A. FABULA cod. 112.0261.258

- Fabula Plus 60
- Fabula Plus 90

FLL18-90 KIT C.A. 90 CM cod. 112.0471.608

- Heaven 2.0 Flat
- Heaven Glass 2.0 Flat
- High-Light
- Inside up

FLL18-120 KIT C.A. 120 CM cod. 112.0471.609

- Heaven 2.0 Flat
- Heaven Glass 2.0 Flat
- High-Light

CHARCOAL FILTERS HIGH PERFORMANCE

High-efficiency filter, it guarantees more than 80% filtration capacity of intake fumes and a duration of up to 6 months.

FHP8 KIT 2 C.A. HIGH PERFORMANCE
cod. 112.0158.127

- Agorà
- Bi-Air
- Beat
- Belle
- Belle Plus
- C-Air
- Cèline
- Cèline Plus
- Chloè XL
- Chloè XL Isola
- Cocktail
- Cubia Plus
- Cubia Gloss Plus
- Daisy
- Glam-Light
- Glam Light Zero Drip Plus
- Glow
- Glow Plus
- Grèxia
- Heaven 2.0
- In-Light
- Inca Lux 2.0
- Inca Lux Glass
- Inka Plus
- K-Air
- Lithos
- Lybra Plus
- Maxima
- Nest Plus
- Odette
- Odette Plus
- Onyx-C
- Onyx-V
- Ranch
- Soft Cube
- Solaris
- Tender
- Thea
- Thea Isola
- Trendy
- T-Shelf
- Tweet
- V-Air
- West
- West Angolo
- Zoom Plus
- 106/35 Plus

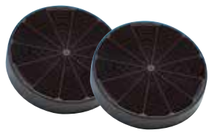

CHARCOAL FILTERS

Filter composed by a combination of charcoals and it should be replaced every 2-3 months.

F1 KIT 1 C.A. D233 H20 cod. 112.0157.238

1 MOTORE - 1 blower
- 152

2 MOTORI - 2 blowers
- 2152 - 2156
- 2740

Order 2 filters for 2 motor hoods

F3 KIT 2 C.A. SMILE cod. 112.0067.944

- Flexa HIP
- In-Nova Smart
- Value

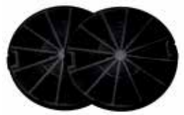

F4 KIT 14B cod. 112.0441.093

- In-Nova Comfort

F8 KIT 2 C.A.D196 H37 cod. 112.0157.240

- Agorà
- Bi-Air
- Beat
- Belle
- Belle Plus
- C-Air
- Cèline
- Cèline Plus
- Chloè XL
- Chloè XL Isola
- Cocktail
- Cubia Plus
- Cubia Gloss Plus
- Daisy
- Glam-Light
- Glam Light Zero Drip Plus
- Glow
- Glow Plus
- Grèxia
- Heaven 2.0
- In-Light
- Inca Lux 2.0
- Inca Lux Glass
- Inka Plus
- K-Air
- Lithos
- Lybra Plus
- Maxima
- Nest Plus
- Odette
- Odette Plus
- Onyx-C
- Onyx-V
- Ranch
- Soft Cube
- Solaris
- Tender
- Thea
- Thea Isola
- Trendy
- T-Shelf
- Tweet
- V-Air
- West
- West Angolo
- Zoom Plus
- 106/35 Plus

F9 KIT 1 C.A. 263x237 cod. 112.0157.243

- Bella Comfort
- Bella Comfort Isola
- Corinthia Isola
- Cubia Isola Plus
- Cubia Isola Gloss Plus
- Cylindra
- Cylindra Isola
- Cylindra Gloss Plus
- Cylindra Isola Gloss Plus
- Eclipse
- Glassy Isola
- In-Nova Premium
- In-Nova Touch
- In-Nova Zero Drip
- Nice
- Onyx-T
- Premio Angolo/SP
- Ray
- Stilo Angolo
- Stilo Isola/SP
- Stilo Comfort
- Stilo Comfort Isola
- Stilo Glass Smart
- Stilo Glass Smart Isola
- Stilo Smart
- Stilo DX-SX
- T-Air
- T-Dark
- T-Light
- T-Light Isola
- Tratto Isola

F16 KIT 2 C.A. cod. 112.0459.452

- Luft

F21 KIT 2 C.A. cod. 112.0506.172

- Ilma
- Ilma Touch

F22 KIT C.A. NAUTILUS cod. 112.0540.783

- Glam-Fit
- Glam Fit Zero Drip Plus
- Pyana
- Talika
- Twice
- Soft Slim

NOTE
Order 2 filters for TWICE and PYANA models

KIT F23 C.A. D125 cod. 112.0556.527

- Inka Smart C
- Inka Smart HC
- Inka ICH (i.smart HCS)

KIT F26 C.A. cod. 112.0627.248

- In-Nova Zero Drip

INSTALLATION

ABC OF THE HOOD

The extraction hood expels fumes and steam out of the kitchen. It is the most effective solution.

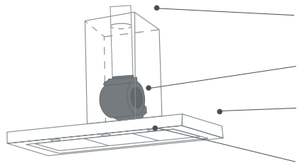

- Air ducting system (brings air out)
- Extraction group (sucks air)
- External body
- Anti-grease filter (protects the motor from grease damage)

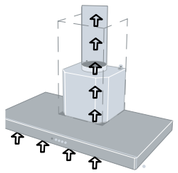

The recycling hood filters the fumes and steam from the air and then returns it to the kitchen.

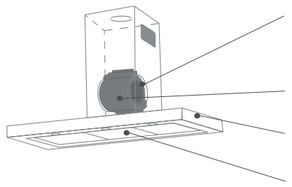

- Charcoal filter (filters the air from the odours - only with filtering hoods)
- Extraction group (sucks air)
- External body
- Anti-grease filter (protects the motor from grease damage)

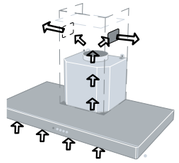

CHOOSE THE RIGHT HOOD

The necessary extraction capacity is determined by the volume of the kitchen. An effective hood changes the air of the kitchen 10 times per hour. A powerful motor is quieter and uses less energy because it is effective at low speeds.
-A hood does not create noise disturbance if its capacity is sufficient without exceeding 55 dB(A) of sound power.
-A powerful motor can be efficient even at lower, quieter speeds.
1 Fan Handbook - F. Bleier 1998

Example: A 15 m² kitchen which is 3 m tall requires a hood which aspirates at least 450 m3/h. Infact: 15 m² x 3 m x 10 = 450 m³/h
Now consult the performance table found in the product catalogue.
The hood is efficient if an equal or higher capacity value is found in one of the speed columns.

EFFECTIVENESS = kitchen m² x kitchen high x 10 changes of air

Speed	1	2	3	4	INT
Air capacity IEC point	110	195	260	313	430
Pressure	-	-	-	-	-
Input	30	45	55	70	100
Noise level	48	53	58	62	69

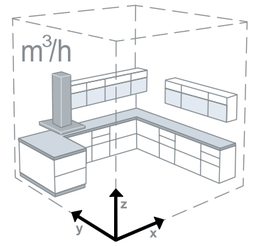

INSTALLATION

Proper installation begins with an inspection. When choosing a hood, you should know:

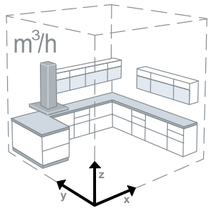

Kitchen volume (which determines the necessary aspiration capacity). See section “Choosing the right hood.”

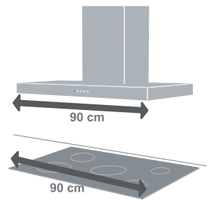

Length of the cooking top (the hood is generally as long as the cooking top area).

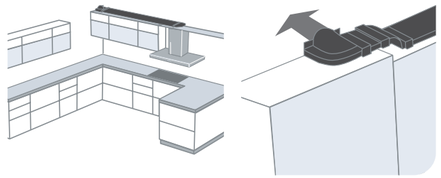

The position and distance of the exit hole (very long and very curved right-angled tubes limit hood efficiency).

Italian D.M. 37/08 requires two aeration holes which communicate with the external wall in the presence of gas-working equipment.

1. an entrance hole for oxygenising the area, to be made in the lower part of the wall of the room which communicates externally.
2. an exit hole for fume discharge, to be made in the upper part of the wall which communicates externally (or in a chimney flue dedicated exclusively to this use). If the hood aspirates, the exit hole can be used as a terminal conduit that carries the air outside.

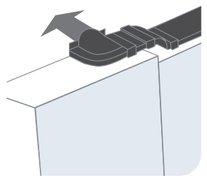

Product integrity
- Check the integrity of the hood upon opening.
- Make sure that the hood is in good conditions and has not been damaged during transport.
- The hood must arrive with its guarantee and instruction manual. Verify the receipt of any optionals (i.e. remote control).
ATTENTION: Do not install the hood if it is damaged. Have it substituted at no charge with a new one, otherwise you may be required to pay for any service assistance. Do not remove any protective films prior to installation.

Installation distance

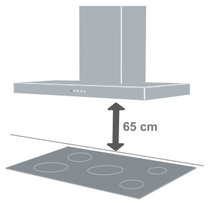

The hood is to be installed at a minimum distance of 65 cm from the cooking top, except for particular models where is specified in the technical drawing and instructions manual.
ATTENTION: the product guarantee will not be considered valid if this distance is not respected.
The hood may not reach declared performance levels if the distance from the cooking top exceeds 75 cm.
Some vertical-installation models (ex. Cocktail) are to be installed lower. Check the product’s technical manual.

Inspection

1 - Turn on the motor
2 - Switch on the lights
If the hood is an extraction hood, verify that it is properly connected to the exit tubing.
If the hood is a filtering hood, verify that the charcoal filters have been inserted.

First cleaning

- Remove the protective films
- Remove impurities with a damp sponge and a small amount of neutral soap
- Rinse with a damp cloth
- Dry with a soft cloth. If the hood is in stainless steel, continue with a steel glaze
- You can give stainless steel hoods a protective treatment with the Faber Clin&Clin tissue

EASY CUBE

Faber hoods are easy to install because they have EASY CUBE:

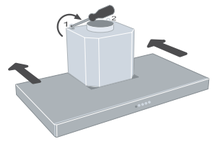

Hang the hood

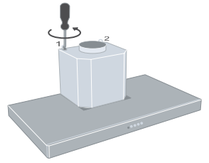

Align

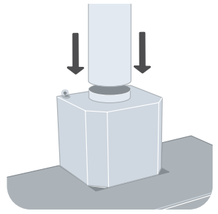

Connect tubing

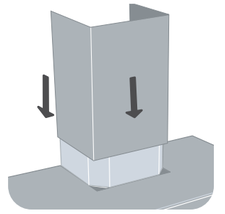

Insert the chimney

USO E MANUTENZIONE

USE AND MAINTENANCE

Accendere la cappa un minuto prima di iniziare a cucinare per creare un flusso d’aria che convogli fumi e vapori verso la superficiedi aspirazione.
Lasciare, se serve, la cappa accesa anche dopo la cottura fino a che siano stati aspirati tutti i vapori e gli odori.

Switch on the hood a minute before cooking begins to create air flow that channels fumes and steam toward the aspiration surfaces.
If necessary, leave the hood switched on even after cooking is finished so that all steam and odours can be properly aspirated.

- Wash the metal anti-grease filters by hand or in the dishwasher every two months[1]
- Replace synthetic anti-grease filters every two months
- Regular filter maintenance guarantees efficient hood use
ATTENTION: grease deposited on the filters is inflammable: be sure to perform regular maintenance

[1] These intervals of time refer to a regular use of the hood, approximately 3 hours per day

Hood cleaning
- Remove impurities with a damp sponge and a small amount of neutral soap[2]
- Rinse with a damp cloth
- Dry with a soft cloth, if the hood is in stainless steel, follow the steel brushing
- Clean the internal hood conduit once a year

[2] Acid-based cleaning products can damage hood surfaces

ANTI-ODOURS FILTERS

Long Lasting

3
YEARS
MAX

Faber has developed a new, re-usable active carbon filter. Thanks to the multi-layer technology, the Long Lasting filter further increases filtration efficiency, with the double layer using an initial pre-filtration to capture the largest particles, and a second, more concentrated filtration to guarantee optimal air cleanliness.
The filter can be washed in the dishwasher every 3-4 months[1], for a maximum of 3 years and dries at room temperature in a vertical position to allow the water to drain out. Alternatively, it can be placed in an oven at 50°C.

[1] Normal use cooker hood, by around 3 hours per day

High Performance

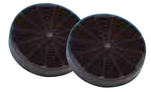

6
MONTHS
MAX

High-efficiency filter with a highly-concentrated carbon micro-granular structure that can guarantee more than 80% filtration capacity of intake fumes and a duration of up to 6 months, double that of a normal charcoal filter, making for economic savings of more than 20%.

CERAMIC FILTER

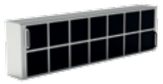

Innovative charcoal filter that can be rigenerated in the oven at 200° every 2-3 months and allows to reach high absorption efficiency

CLIN & CLIN CLEANING LINE

Clin&Clin revitalising paste

Removes marks, spots and small rust stains caused by daily use, restoring a natural shine to steel surfaces.

Clin&Clin protective tissues

Protect and maintain the beauty of steel surfaces over time.
Practical and disposable. To be applied on clean, dry surfaces.

QUALITY AND SAFETY

Faber hoods benefit from 60 years of competence in the treatment of kitchen air

- We were the first in the kitchen hood sector to obtain an ISO 9001 company qualitysystem certificate.
- System integrated with Quality, Safety and Environment certified by SGS respecting the ISO 9001:2000, OHSAS 18001 and ISO 14001 norms.
- We have received the SGS Excellence Certificate, the absolute first in the world, number 001.
- All Faber hoods conform to European safety standards (EC mark of conformity), and have also been certified by the IMQ, a reliable, independent organisation further guaranteeing clients on quality (IMQ mark of security).

FABER HOODS ARE DESIGNED FOR SAFETY

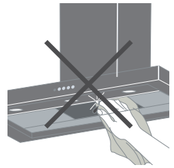

Hammered internal edges and tempered glass to avoid risks of cutting.

Thermo-protected motors and self-extinguishing plastics help avoid any risk of fire.
Electronics are solid state, cables and connections are all placed correctly to avoid electric shock or dangerous sparks.

All Faber hoods have undergone safety and performance tests.
Aspiration and noise capacity have been measured according to standard norms:
- EN 61591
- EN 60704-3
unique specifications for surveying kitchen hood performance.
ATTENTION: Comparisons between different brand hoods should be carried out on complete data obtained according to these standards.
The Faber laboratory is NEMKO and IMQ certified.

ASSISTENZA

ASSISTANCE

Contact Number
0732.691691

Our toll Contact Number can be reached from Monday to Friday from 8am to 8pm and Saturday from 8am to 2pm for the following service assistance:
- Information about products
- Information about shop branches
- Information about where to purchase spare parts and accessories
- Activation of technical assistance request
- Product or service complaints

The cost of the call may vary depending on the operator used.
Please consult the rates of your operator.

Faber Technical Assistance is also active in Europe

Check the website www.faberspa.com for phone numbers

All Faber products are covered with a 2-year “Full guarantee”

“Full guarantee” that covers any compliant defects which might be revealed on the hood over this period.
This guarantee does not cover defects not attributable to Faber such as those caused by erred installation, by any use not compliant with the instructions detailed in the instruction manual or by damage caused during transport.

SPECIAL FINISHES

The images are indicative only and are not fully representative of the product finish.

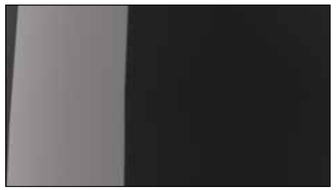

Black gloss

Black matt RAL 9005

White matt NCS S 500N

White

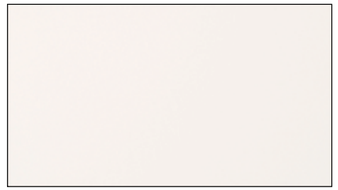

Warm white

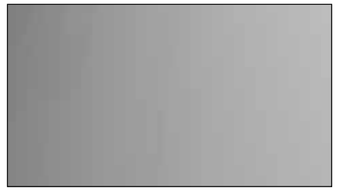

Grey matt

Burgundy/Gold RAL 020 30 30

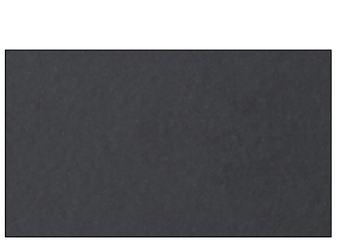

Dark grey matt RAL 0003000

Country grey matt

Cast iron

Old metal

Dark grey concrete

Cross titanium

Dark grey stoneware

Light grey stoneware

Gold

Old brass RAL 8025

Old copper

Tibetan Silver

White/Warm gray 3C - WH/WG

White/Transparent - WH/T

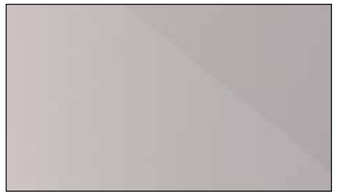

Warm gray 1C/Warm gray 3C - WG1C/WG3C

Dark grey/Light grey - DG/LG

Dusty blue RAL 240 60 15

Sand RAL 0508010

Titanium matt RAL 7048

The performance shown in this catalogue is declared in accordance with the new Code of Conduct signed by the most qualified European manufacturers members of CECED (European Committee of Domestic Equipment Manufacturers), a strict code for transparency which establishes clear rules to measure air flow and noise level for hoods, common to all cooker hoods manufacturers:
- air capacity according to IEC/EN 61591 method (with the hood fitted using a ducting pipe)
- noise level according to IEC/EN 60704-3 method (sound power)

FINISHES

AM/X	**metal aluminium/stainless steel handle**
BK	**black**
BK GLASS/A	**black glass/aluminium**
BK GLOSS	**black gloss**
CG	**country grey**
CI	**cast iron**
CT	**cross titanium**
DB	**dusty blue**
DG	**dark grey**
DG/C	**dark grey/concrete**
DGC	**dark grey concrete**
LG	**light grey**
LG/X	**light grey/stainless steel handle**
OB	**old brass**
OC	**old copper**
OM	**old metal**
SS	**black body/stainless steel strip**
WG	**warm gray**
WH	**white**
WH MATT/TS	**white matt/tibetan silver**
WW	**warm white**
X	**stainless steel**
X/OM	**stainless steel/old metal**
X/V	**stainless steel/glass**

PERFORMANCE

SPEED **Speed**

M^3/H **Air capacity IEC point**

PA **Pressure**

W **Input**

dB(A) **Noise level**

16 **1 motor,** width 600 mm

18 **1 motor,** width 800 mm

19 **1 motor,** width 900 mm

Il produttore si riserva il diritto di apportare modifiche di materiale e di modelli senza preavviso.

faberspa.com

992.0627.719 07/2020 – 1.500